FOREWORD

This repair manual has been prepared to provide information on the repair methods (including cutting and welding operations, but excluding painting) recommended by TOYOTA for collision-damaged body components of the TOYOTA CAMRY.

Applicable models: SV20, 21 series
CV20 series

This manual consists of body repair methods, exploded diagrams and illustrations of the body components and other information relating to body panel replacement such as handling precautions, tools, equipment, etc. However, it should be noted that the front fenders of all TOYOTA models are bolted on and require no welding.

Body construction will sometimes differ depending on specifications and country of destination. Therefore, please keep in mind that the information contained herein is based on vehicles for general destinations.

For the service of specifications and repair procedures other than collision-damaged body components of the TOYOTA CAMRY, refer to the following repair manuals.

Manual Name	Pub. No.
CAMRY Chassis and Body Repair Manual CAMRY Repair Manual (USA and Canada)	36216E Model Year Version
Electrical Wiring Diagram (Ex. USA and Canada) (USA and Canada)	EWD027E Model Year Version
1S, 1S-E, 2S, 2S-C, 2S-E, 3S-FE & 3S-GE Engine Repair Manual (Ex. USA and Canada)	RM051E
1C, 2C & 2C-T Engine Repair Manual (Ex. USA and Canada)	RM025E
Fundamental Painting Procedures Fundamental Body Repair Procedures	36438E BRM002E

All information contained in this manual is the most up-to-date at the time of publication. However, specifications and procedures are subject to change without prior notice.

TOYOTA MOTOR CORPORATION

HOW TO USE THIS MANUAL

Each repair method description provided in Section RE of this manual comprises two pages, divided into 2 blocks (REMOVAL AND INSTALLATION) and includes illustrations to facilitate body repair.

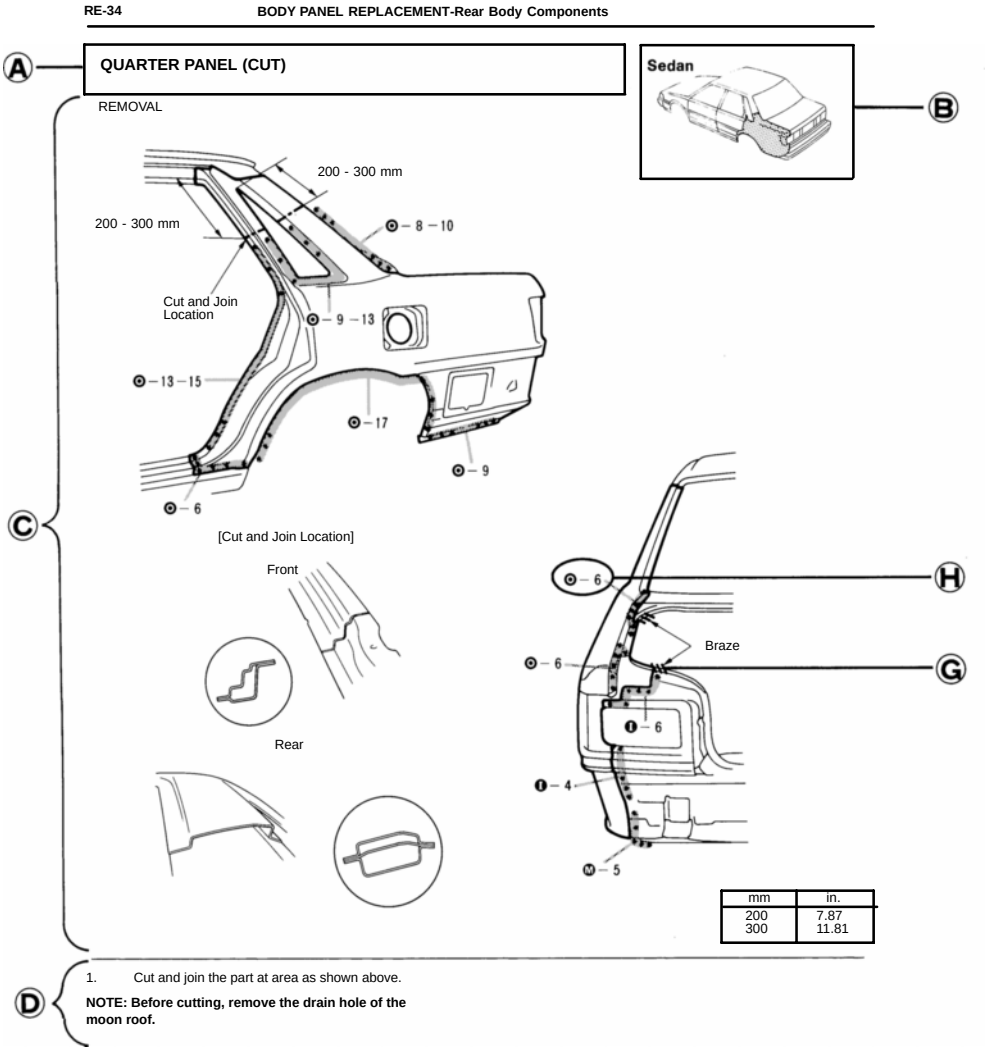

Ⓐ : REPLACEMENT PART AND METHOD

QUARTER PANEL (CUT)

- Replacement method
  - (ASSY) . . . . . Assembly replacement
  - (CUT) . . . . . Major cutting (less than 1/2 of part used)
  - (CUT-H) . . . . Half cutting (about 1/2 of part used)
  - (CUT-P) . . . . Partial cutting (most of part used)
- Replacement part

Ⓑ : BODY VARIATIONS AND PART LOCATION

Body variations: Non . . . . All models
Sedan . . Sedan models
Wagon . Wagon models

Ⓒ : REMOVAL DIAGRAM

Describes in detail removal of the damaged part involving repair by cutting.

Ⓓ : REMOVAL GUIDE

Provides additional information to more efficiently help you perform the removal.

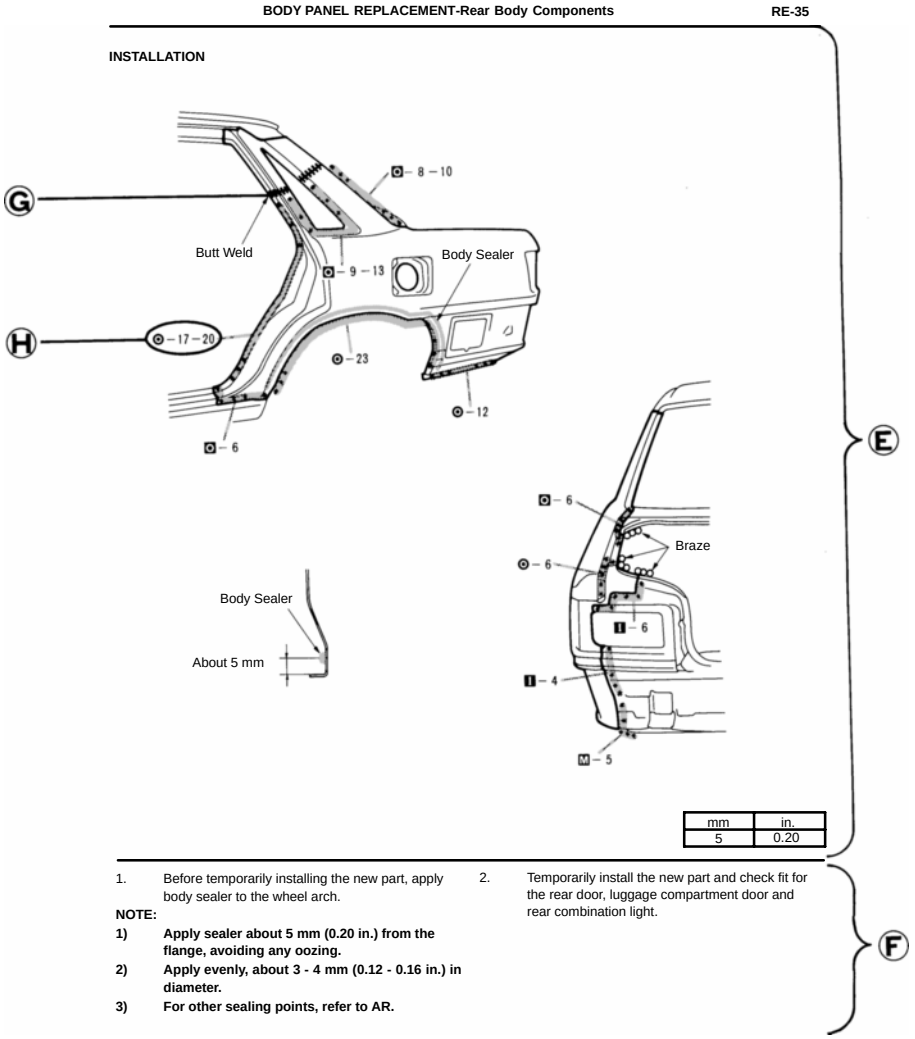

Ⓔ : INSTALLATION DIAGRAM
Describes in detail installation of the new part involving repair by welding and/or cutting, but excluding painting.

Ⓕ : INSTALLATION GUIDE
Provides additional information to more efficiently help you perform the installation.

Ⓖ : SYMBOLS
See page IN-4 .

Ⓗ : ILLUSTRATION of WELD POINT
Weld method and panel position symbols.
See page IN-5 .

SYMBOLS

The following symbols are used in the welding Diagrams in Section RE of this manual to indicate cutting areas and the types of weld required.

SYMBOLS	MEANING	ILLUSTRATION
	SAW CUT OR ROUGH CUT	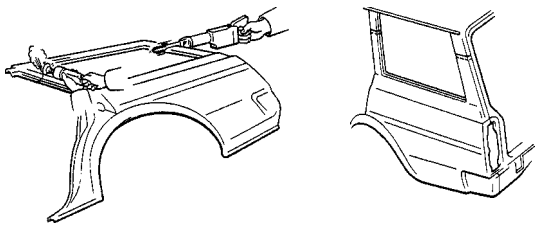
	REMOVE BRAZE	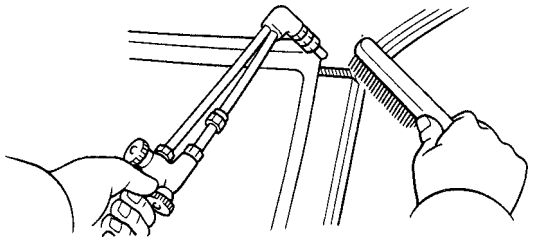
	WELD POINTS SPOT WELD OR MIG PLUG WELD (See page IN-5)	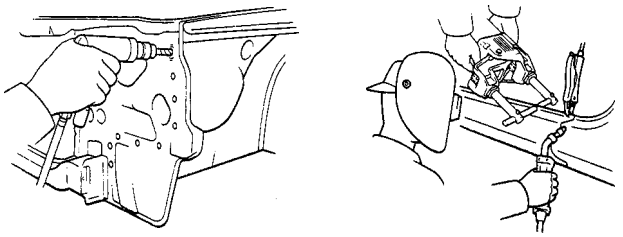
	CONTINUOUS MIG WELD (BUT WELD OR TACK WELD)	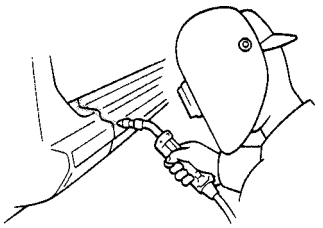
	BRAZE	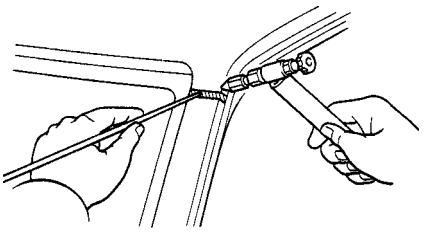
	BODY SEALER	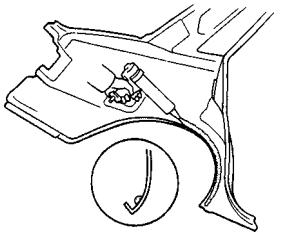

Illustration of Weld Point Symbols

EXAMPLE:

REMOVAL

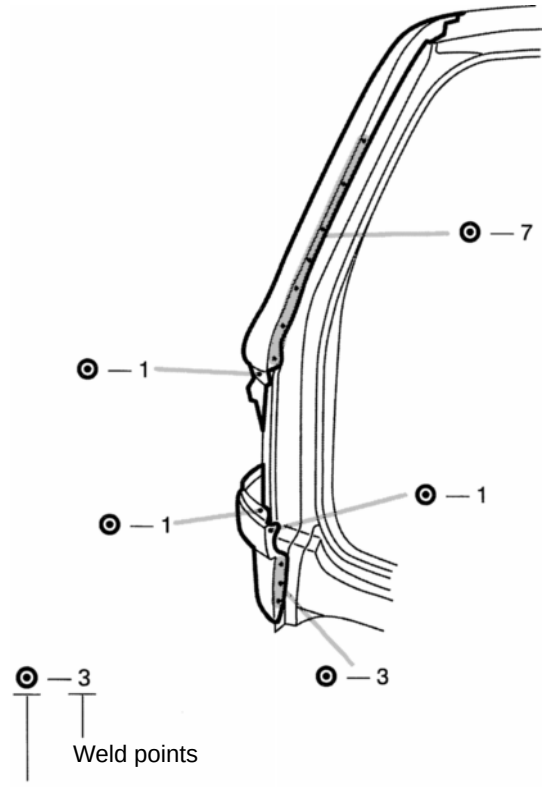

Remove weld point and panel position

INSTALLATION

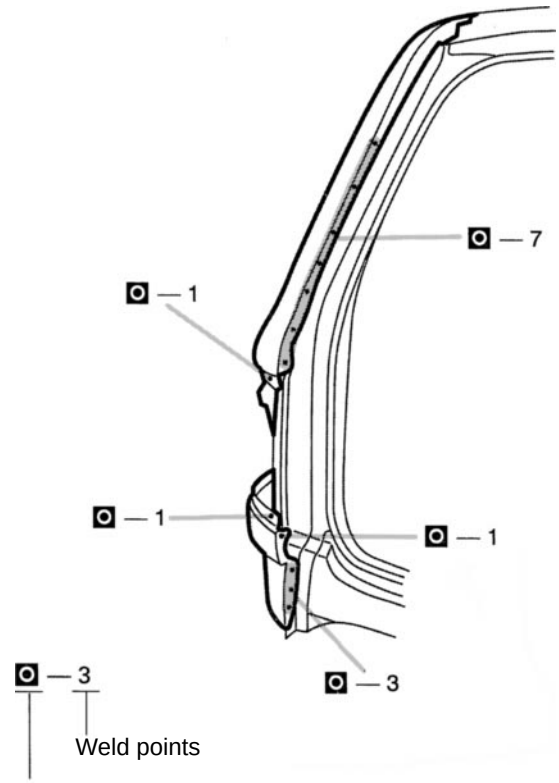

Weld method and panel position

SYMBOL	MEANING	ILLUSTRATION
O M I	Remove Weld Points	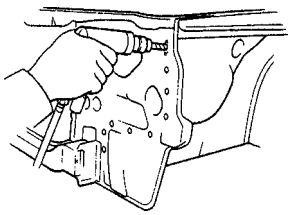
O	(Outside)	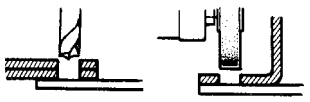
M	(Middle)	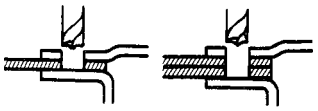
I	(Inside)	

HINT: Panel position syrnbols are as seen from the working posture.

SYMBOL	MEANING	ILLUSTRATION
O M I	Spot Weld	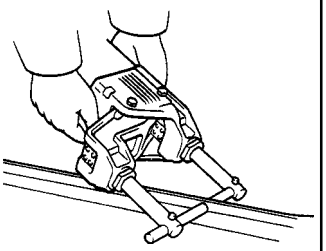
O M I	Mig Plug Weld	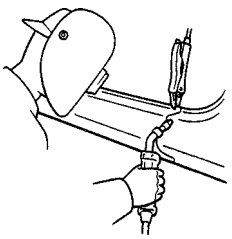
+	Spot MIG Weld	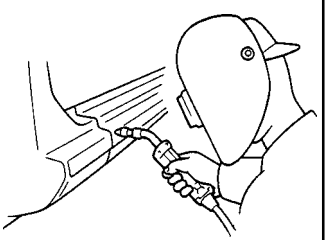

VEHICLE LIFT AND SUPPORT LOCATIONS

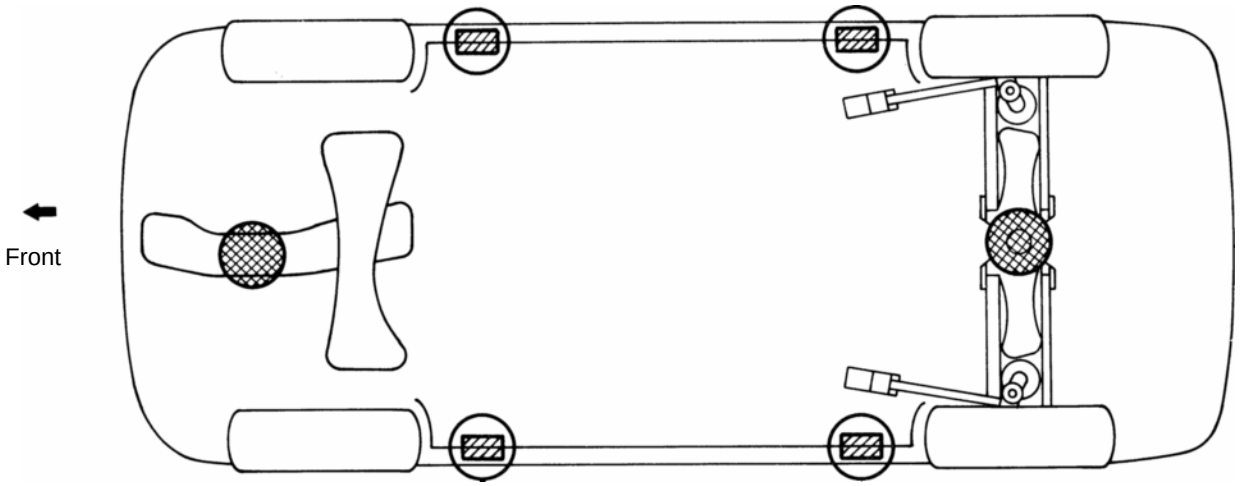

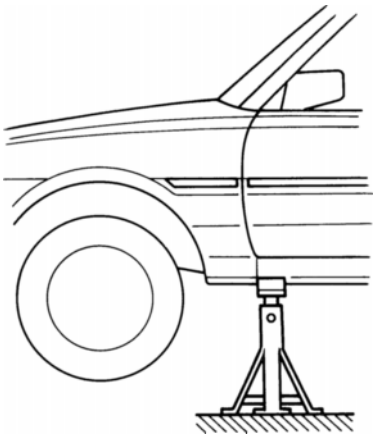

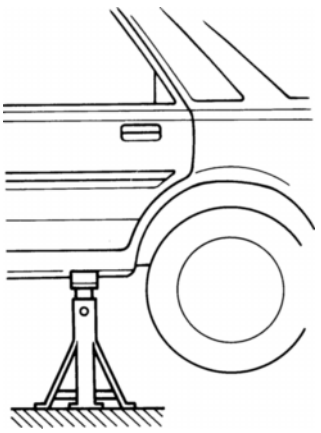

JACK POSITION

Front . . . . . Center of engine mounting center member
Rear . . . . . Jack up support of rear suspension member

PANTOGRAPH JACK POSITION
SUPPORT POSITION

Safety stand . . . . . .

IN0102

ABBREVIATIONS USED IN THIS MANUAL

For convenience, the following abbreviations are used in this manual

Assy, assy	Assembly, assembly
Sub-assy	Sub-assembly
Ex.	Except
in.	Inch
IRS	Independent Rear Suspension
4-link	4-link Rear Suspension
MIG	Metal Inert Gas
OPN	Operation
SP	Spot Weld (Resistance Spot Weld)
w/	With
w/o	Without
FR	Front
RR	Rear
RH	Right-hand
RHD	Right-hand Drive
LH	Left-hand
LHD	Left-hand Drive

GENERAL REPAIR INSTRUCTIONS

Work Precautions

SAFETY
Never stand in direct line with the chain when using a puller on the body or frame, and be sure to attach a safety cable.

VEHICLE PROTECTION
When welding, protect the painted surfaces, windows, seats and carpet with heat-resistant, fire-proof covers.

SAFETY
1. Before performing repair work, check for fuel leaks. If a leak is found, be sure to close the opening totally.
2. If it is necessary to use a frame in the area of the fuel tank, first remove the tank and plug the fuel line.

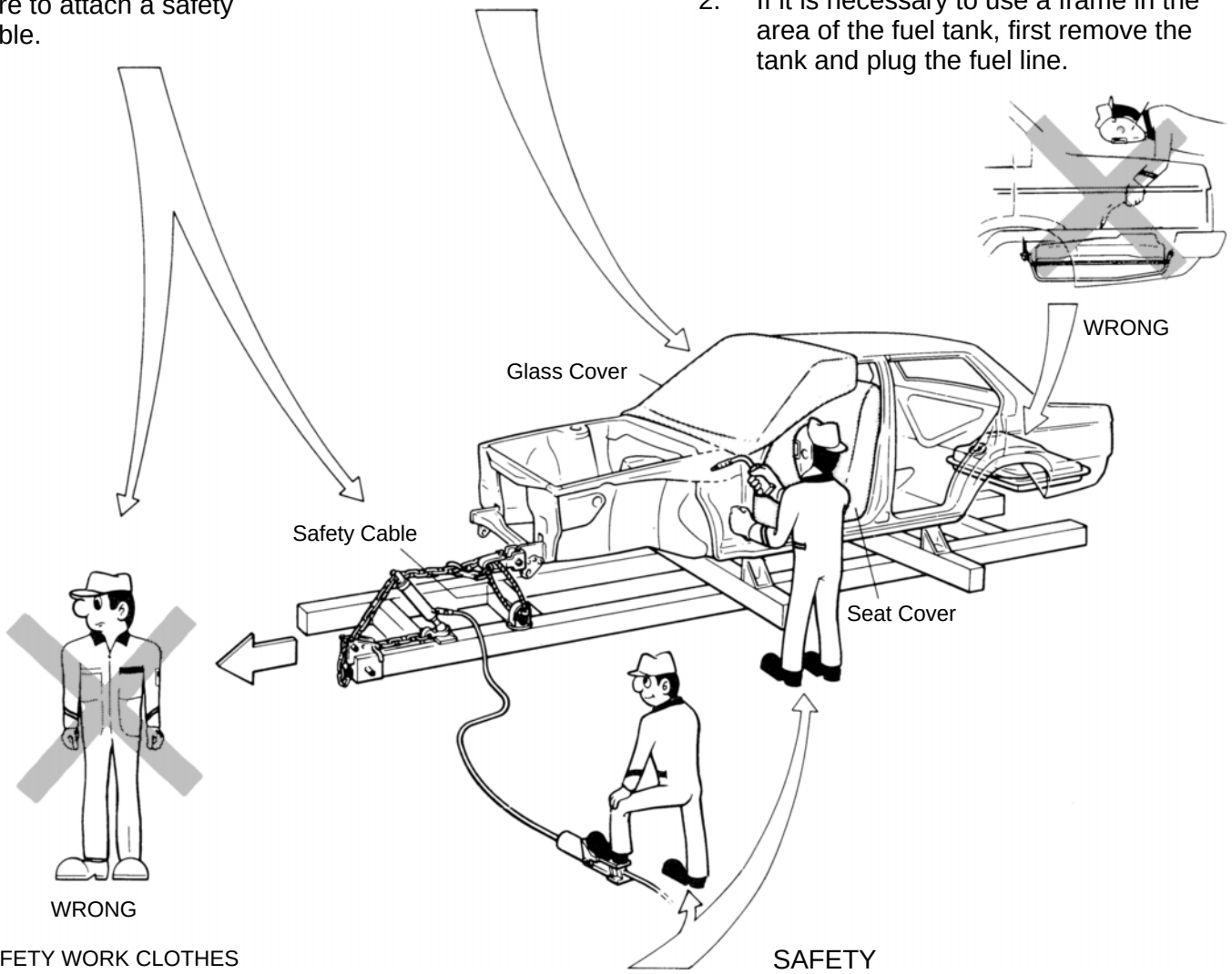

SAFETY WORK CLOTHES
In addition to the usual mechanic wear, cap and safety shoes, the necessary gloves, head protector, glasses, ear plugs, face protector, dust-prevention mask, etc. should be worn as the situation demands.

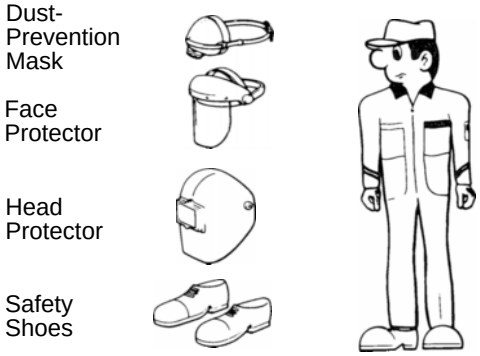

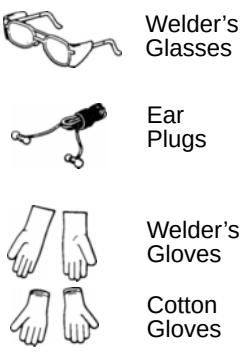

SAFETY
Before performing repair work, disconnect the battery cables.



HAND TOOLS
Keeping your hand tools to neat order will have an effect on your work efficiency.

Proper and Efficient Work Procedures

REMOVAL

PRE-REMOVAL MEASURING
Before removal or cutting operations, take measurements in accordance with the dimension diagram. Always use a puller to straighten a damaged body or frame.

REMOVAL OF ADJACENT COMPONENTS
When removing adjacent components, apply protective tape to the surrounding body and your tools to prevent damage.
CAUTION:

1. *Be especially careful not to damage screw or clip holes.*
2. *If the paint is accidently scratched, apply touch-up paint immediately. Even the slightest scratch may result in corrosion or appearance of rust.*

NO. OF SPOT WELDS
Make a note of the number of spot welds for later reference.
NOTE: The number of spot welds may vary depending on the vehicle.

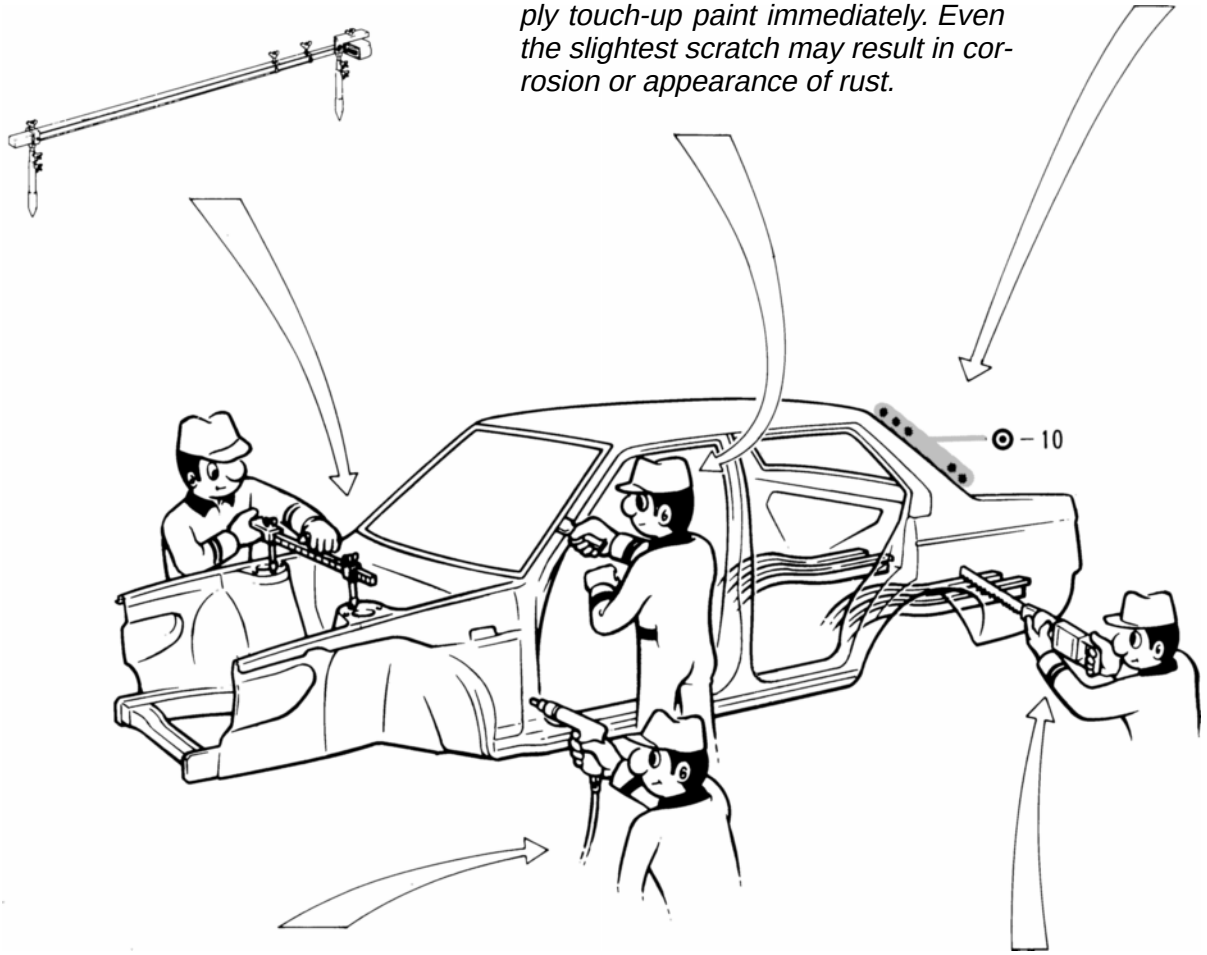

PRECAUTIONS FOR DRILLING OR CUTTING
Check behind any area to be drilled or cut to insure that there are no hoses, wires, etc., that may be damaged.

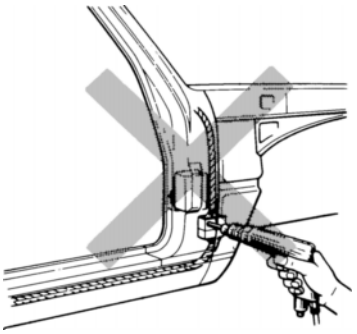

WRONG

CUTTING AREA
Always cut in a straight line and avoid reinforced areas.

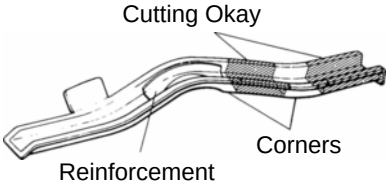

PREPARATION FOR INSTALLATION

SPOT WELD POINTS

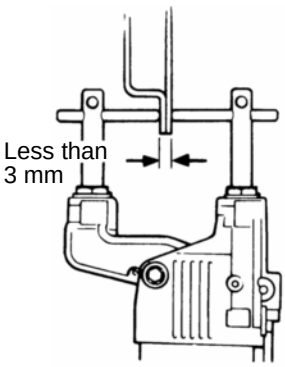

When welding panels with a combined thickness of over 3 mrn (0.12 in.), use a MIG (Metal Inert Gas) welder for plug welding.
NOTE: Spot welding will not provide sufficient durability for panels over 3 mm (0.12 in.) thick.

APPLICATION OF WELD-THROUGH PRIMER

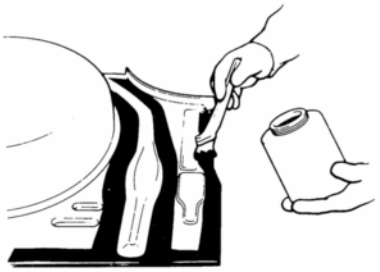

For treatment against corrosion, remove the paint from the portion of the new part and body to be welded, and apply weld-through primer.

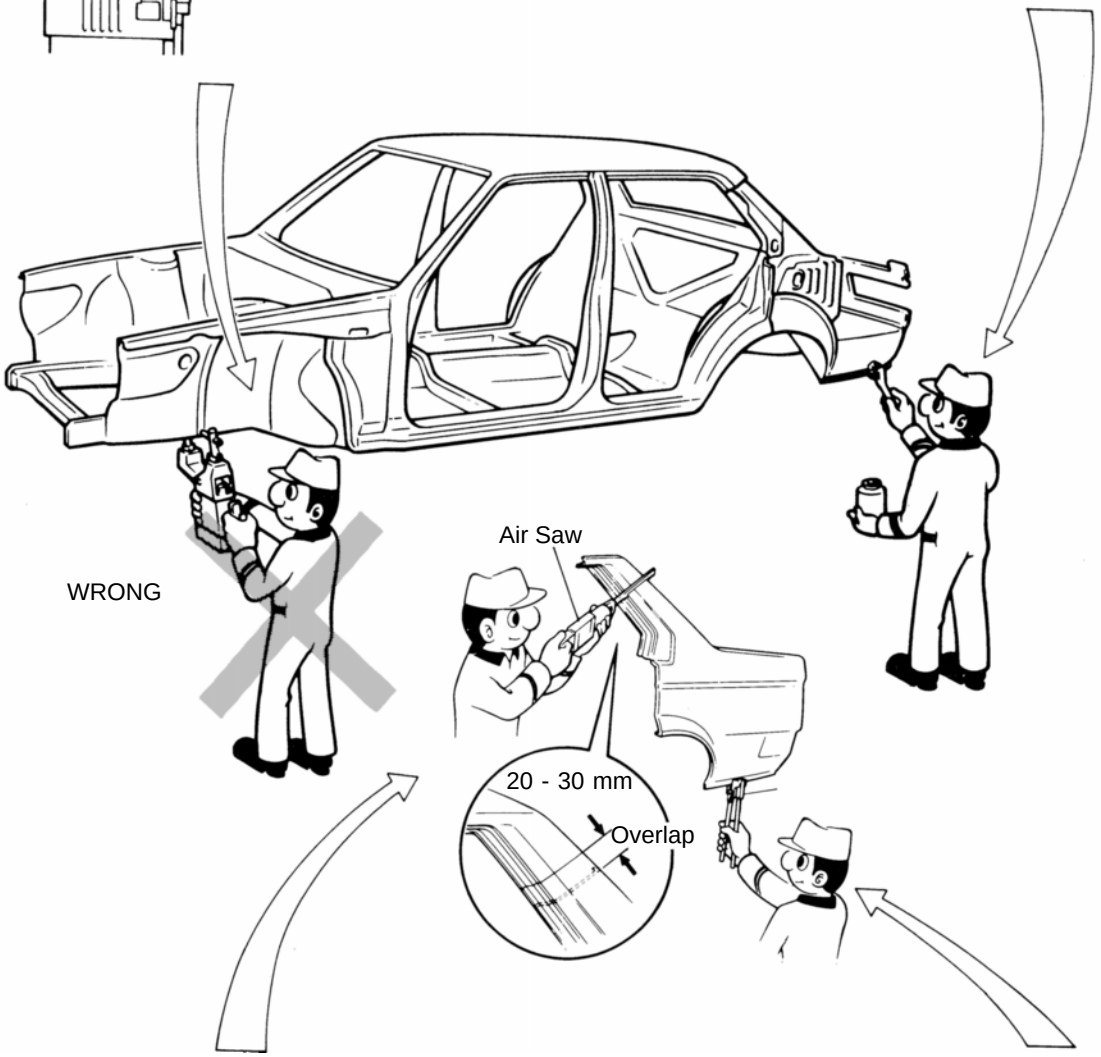

ROUGH CUTTING OF JOINTS
For joint areas, rough cut the new part, leaving 20 - 30 mm (0.79 - 1.18 in.) overlap.

MAKING HOLES FOR PLUG WELDING
For areas where a spot welder cannot be used, use a puncher or drill to make holes for plug welding.

REFERENCE:

mm (in.)

Thickness of welded portion	Size of plug hole
1.0 (0.04) under	5 (0.20) ϕ over
1.0 (0.04) over	6.5 (0.26) ϕ over

INSTALLATION

PRE-WELDING MEASUREMENTS
Always take measurements before installing underbody or engine components to insure correct assembly. After installation, confirm proper fit.

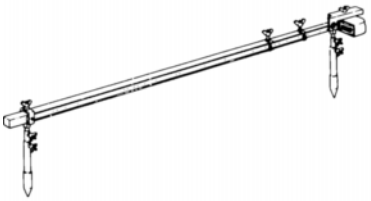

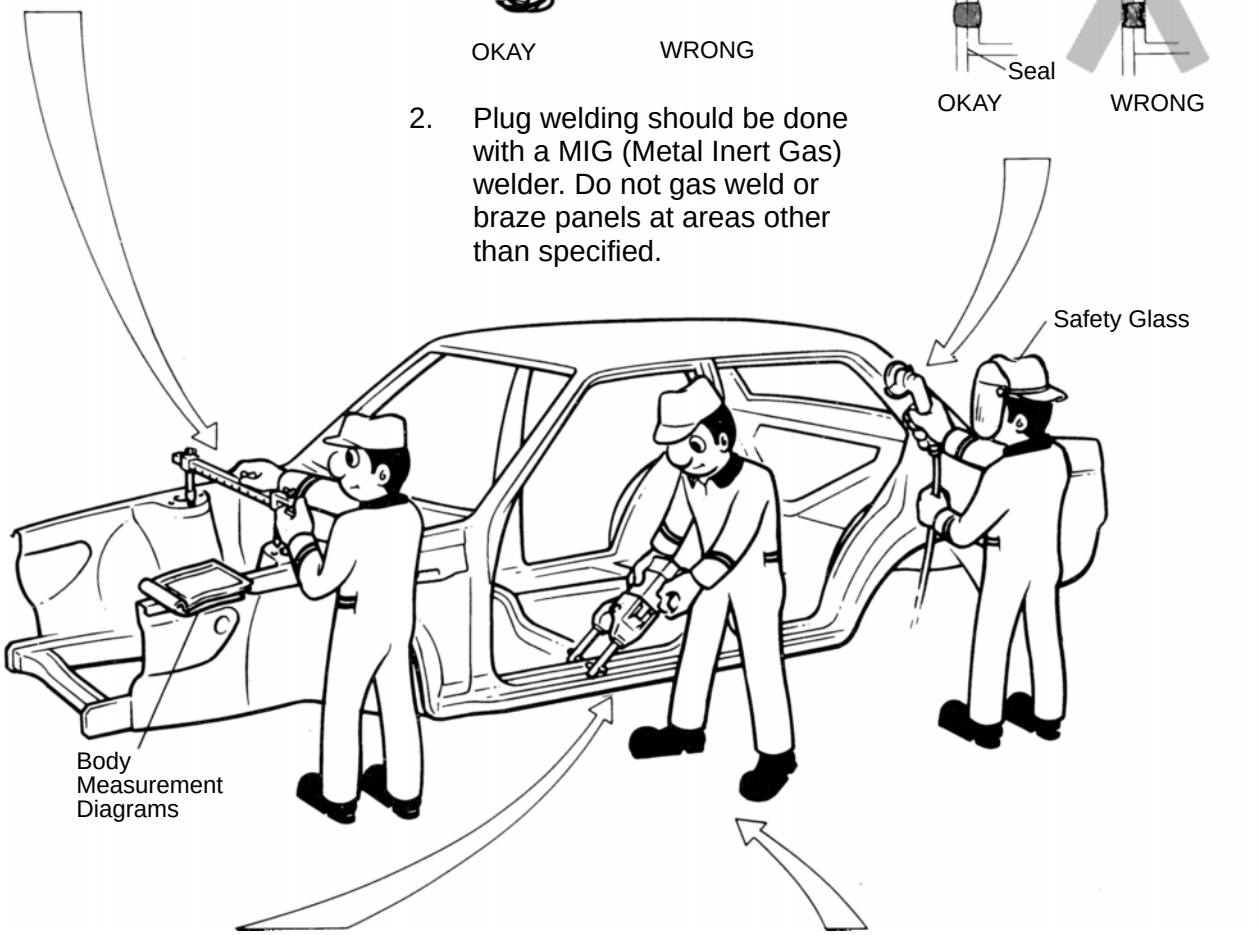

WELDING PRECAUTIONS

1. The number of welding spots should be as follows.
   Spot weld: 1.3 x No. of manufacturer's spots.
   Plug weld: More than No. of manufacturer's plugs.

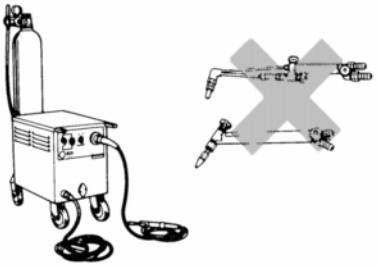

OKAY WRONG

2. Plug welding should be done with a MIG (Metal Inert Gas) welder. Do not gas weld or braze panels at areas other than specified.

POST-WELDING REFINISHING

1. Always check the welded spots to insure they are secure.
2. When smoothing out the weld spots with a disc grinder, be careful not to grind off too much as this would weaken the weld.

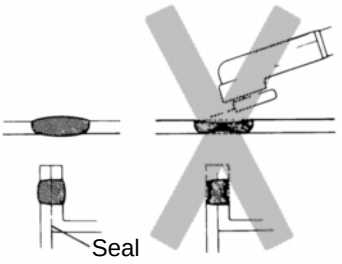

OKAY WRONG

SPOT WELD LOCATIONS
Try to avoid welding over previous spots.

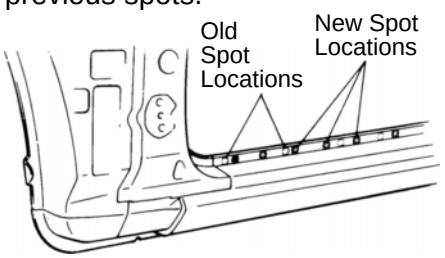

SPOT WELDING PRECAUTIONS

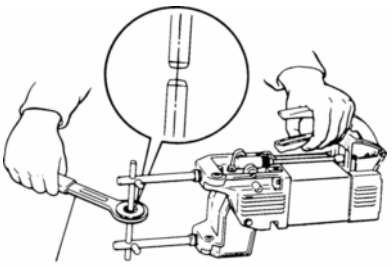

Tip Cutter

1. The shape of the welding tip point has an effect on the strength of the weld.
2. Always insure that the seams and welding tip are free of paint.

ANTI-RUST TREATMENT

When replacing body panels, always apply body sealer, anti-rust agent or undercoat according to the requirements of your country.

BODY SEALER
Apply body sealer to the required areas.



Cartridge Type



Tube Type

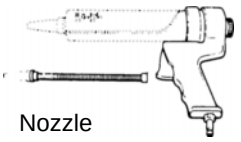

Nozzle

Air Gun

ANTI-RUST AGENT (WAX)
Apply anti-rust agent to following sections.



- Inside of the hems of the doors and hood.
- Around the hinges of the doors and hood.
- Inside of the welded parts with boxed cross-section.

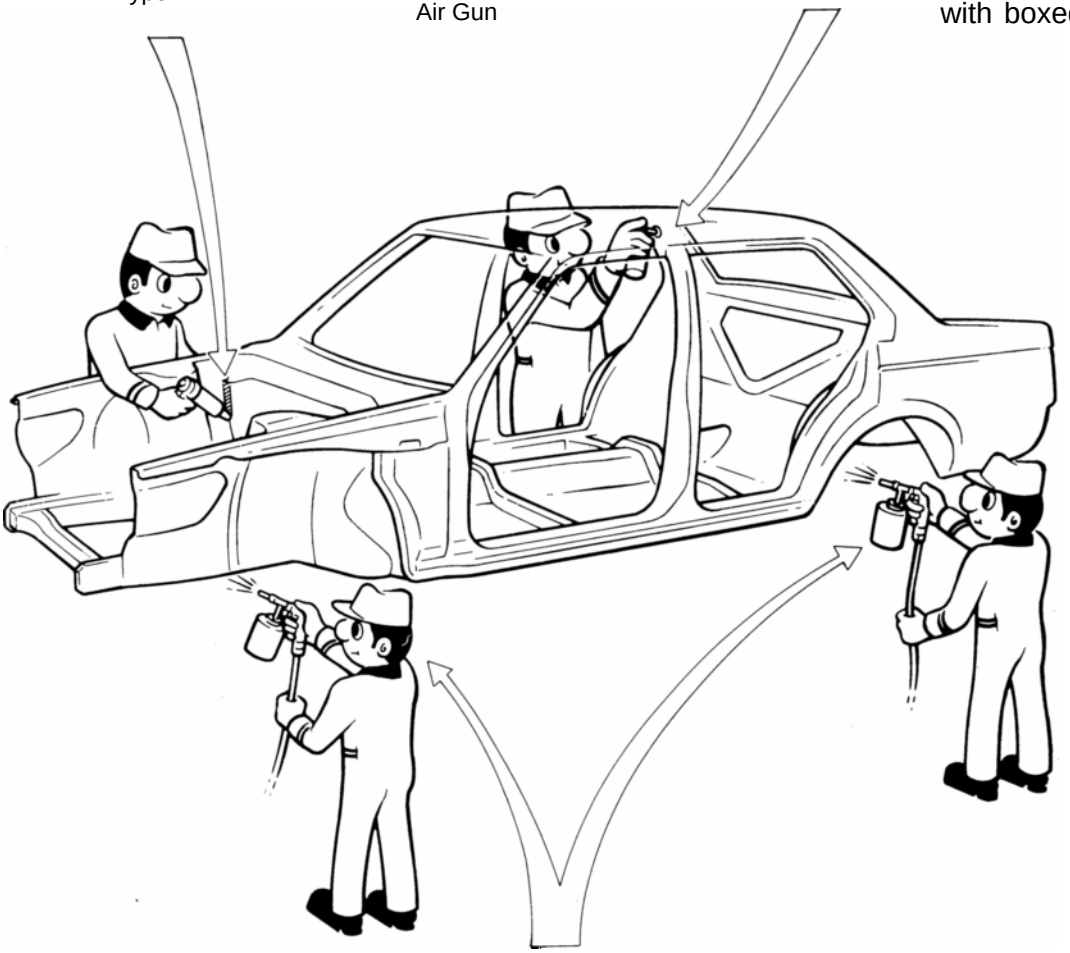

UNDERCOAT
Apply undercoat to the underbody and wheel housings.



Undercoat (Oil base)



Undercoat (Water base)

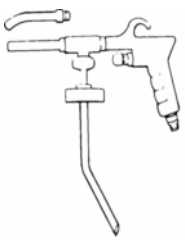

Spray Gun

MEASURING INSTRUMENTS

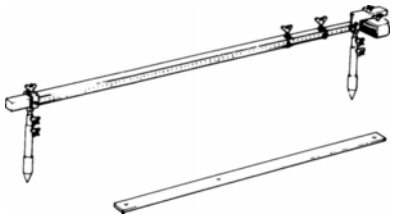	Tracking Gauge	For measuring body dimensions
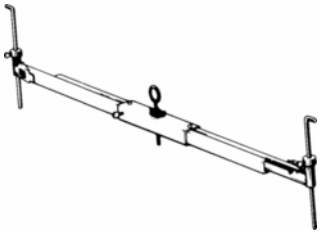	Frame Centering Gauge	When 3 or 4 are used together, measurements of twists, bends or warps in the body and frame are possible.

SEPARATING TOOLS

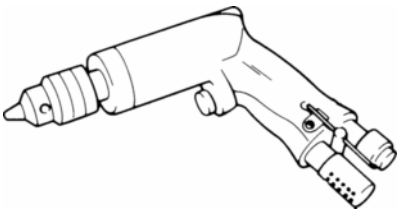	Air-powered Drill	For separating spot welds and making holes in the body.
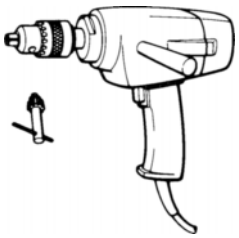	Electric-powered Drill	For separating spot welds and making holes in the body.
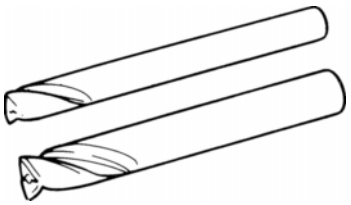	Spot Cutter	For separating spot welds.
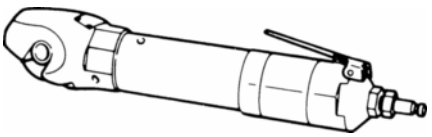	Air-powered Cutter	For cutting panels.
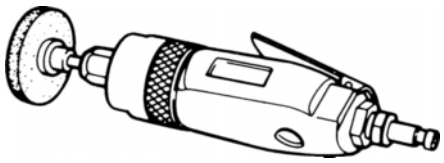	Air-powered Chuck Grinder	For separating spot and plug welds and grinding off traces of plug welds.

SEPARATING TOOLS (Cont'd)

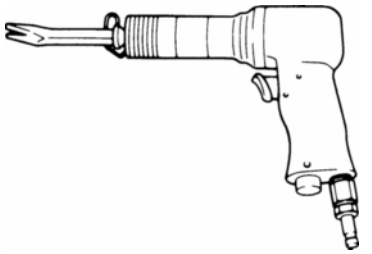	Air-powered Chisel	For rough cutting and rough flattening of panels.
	Panel Cutter	For rough cutting of panels.
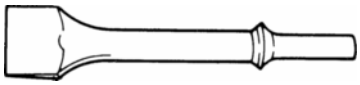	Flat Chisel	For separating spot welds.
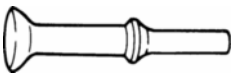	Hammer Tool	For rough flattening in hard-to-reach areas.
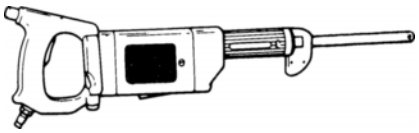	Air-powered Saw	For rough cutting of pillars, rocker panels, etc.
	Air-powered Saw	For rough cutting of pillars, rocker panels, etc.
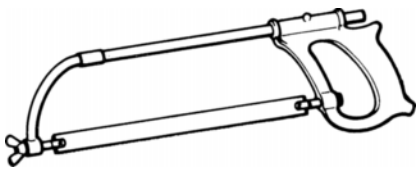	Hacksaw	For rough cutting of pillars, rocker panels, etc.

INSTALLATION ASSISTANCE TOOLS

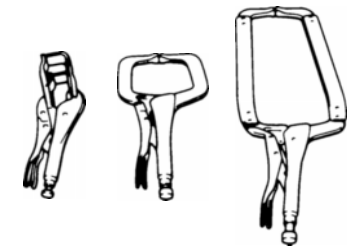	Vise Grip Wrench	For temporary installation of panels and holding of portions to be welded.
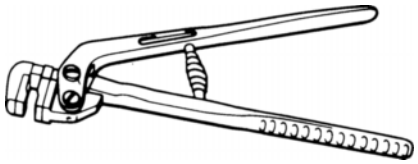	Flanging Tool	For making flanges in overlapping panels.
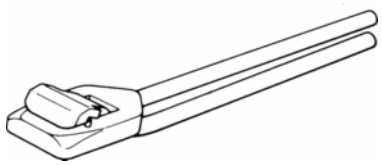	Hemming Tool	For hemming door outer panels, etc.
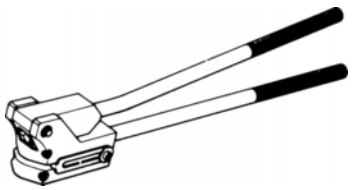	Hole Punch	For making holes for MIG plug welding.

BODY PROTECTORS

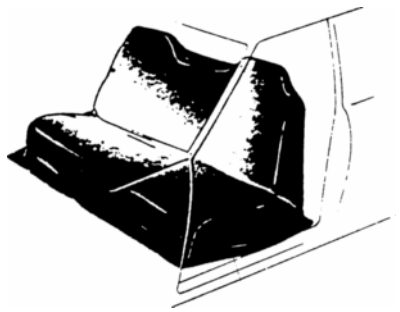	Seat Cover	For protecting the seats from welding sparks, etc.
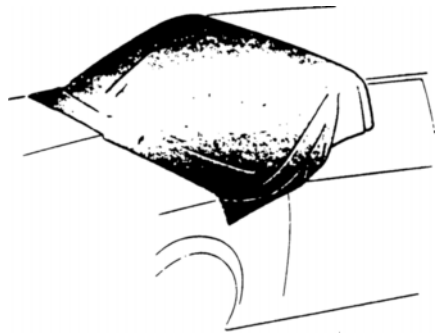	Glass Cover	For protecting the glass from welding sparks, etc.

WELDING INSTRUMENTS

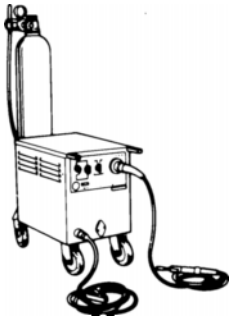	MIG Welder (Metal Inert Gas)	For panel welding.
	Spot Welder	For panel welding.
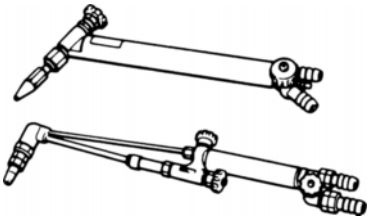	Gas Welder Torch Gas Cutter Torch	For rough cutting of panels, members, etc.
	Acetylene Gas Torch	For soldering and peeling of paint.
	Straightening Machine	For straightening distorted panels.
	Panel Extractor	For extraction of closed-in panels.

BODY PANEL REPLACEMENT

Page

FRONT BODY COMPONENTS

RADIATOR SUPPORT (ASSY) RE-2
FRONT CROSSMEMBER (ASSY) RE-4
FRONT FENDER APRON (ASSY) RE-6
FRONT FENDER FRONT APRON (ASSY) RE-8
FRONT SIDE MEMBER (ASSY) RE-10
FRONT SIDE MEMBER (CUT-P) RE-12

CENTER BODY COMPONENTS

COWL TOP SIDE PANEL (ASSY) RE-14
FRONT BODY PILLAR (CUT) RE-16
CENTER BODY PILLAR (CUT) RE-18
OUTER ROCKER PANEL (CUT) RE-20
ROOF PANEL (ASSY) SEDAN W/O MOONROOF RE-22
ROOF PANEL (ASSY) SEDAN W/ MOONROOF RE-24
ROOF PANEL (ASSY) WAGON W/O MOONROOF RE-26
ROOF PANEL (ASSY) WAGON W/ MOONROOF RE-28
FRONT DOOR OUTER PANEL (ASSY) RE-30
REAR DOOR OUTER PANEL (ASSY) RE-32

REAR BODY COMPONENTS

QUARTER PANEL (CUT): SEDAN RE-34
QUARTER PANEL (CUT): WAGON RE-36
QUARTER PANEL (CUT-P): SEDAN RE-38
QUARTER PANEL (CUT-P): WAGON RE-40
BODY LOWER BACK PANEL (ASSY): SEDAN RE-42
BODY LOWER OUTER BACK PANEL (ASSY): WAGON RE-44
BACK DOOR FRONT OPENING TROUGH (ASSY): WAGON RE-46
ROOF SIDE OUTER PANEL (ASSY): WAGON RE-48
QUARTER WHEEL HOUSING OUTER PANEL (ASSY): SEDAN RE-50
QUARTER WHEEL HOUSING OUTER PANEL (ASSY): WAGON RE-52

REAR UNDER BODY COMPONENTS

REAR FLOOR REAR INNER CROSSMEMBER (CUT): WAGON RE-54
REAR FLOOR PAN (CUT): SEDAN RE-56
REAR FLOOR PAN (CUT): WAGON RE-58
REAR FLOOR REAR SIDE MEMBER (ASSY) RE-60
REAR FLOOR SIDE MEMBER (ASSY) RE-62
CENTER FLOOR NO. 2 CROSSMEMBER (ASSY) RE-64

LIGHT BODY REPAIR TOOLS

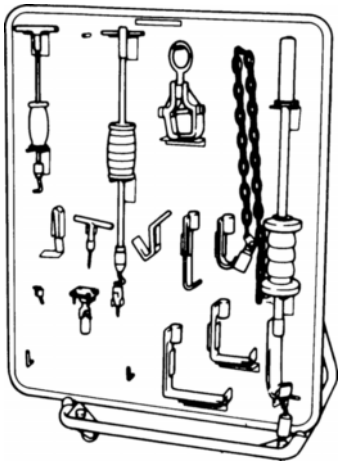	Body Pullers	For straightening lightly damaged panels.

GRINDING AND POLISHING TOOLS

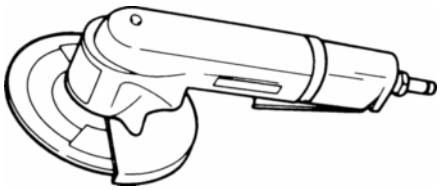	Air-powered Disc Grinder	For grinding plug welds, butt welds and door hems.
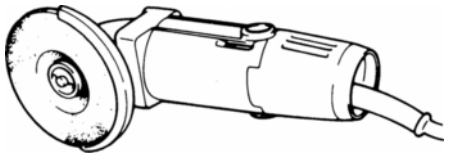	Electric-powered Disc Sander	For grinding plug welds, butt welds and door hems.
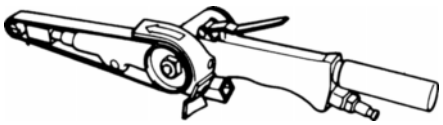	Belt Sander	For removing paint around weld areas.
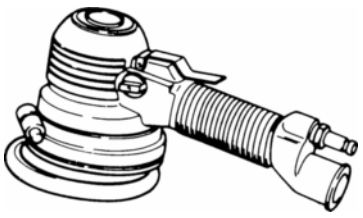	Double-action Sander	For rough grinding and polishing, and feather edging.

GRINDING AND POLISHING TOOLS (Cont'd)

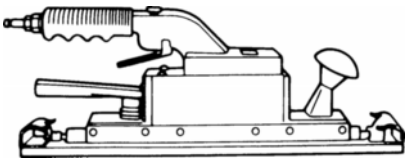	Straight-line Sander	For rough polishing of panel putty.
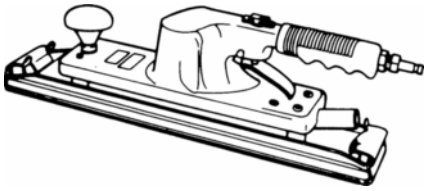	Air-powered Orbital Sander	For removing putty over a wide area, resurfacing and refinishing.
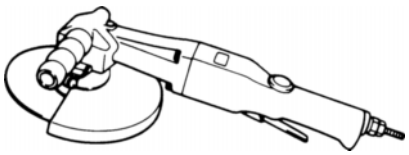	Air-powered Disc Sander	For peeling paint.
	File Holder	For paint removal.
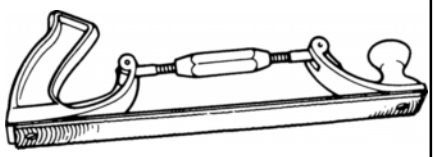	Flexible File Holder	For correction of soldering spots and resurfacing of panels.
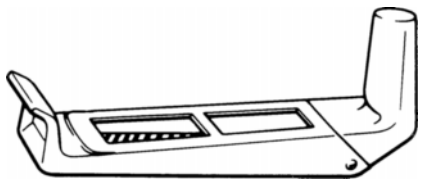	Surform Tool	For rough finishing of panels.

RADIATOR SUPPORT (ASSY)

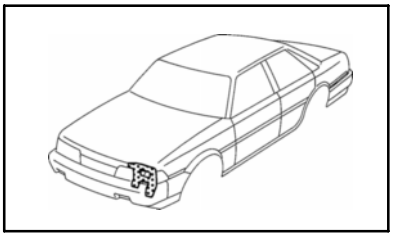

REMOVAL

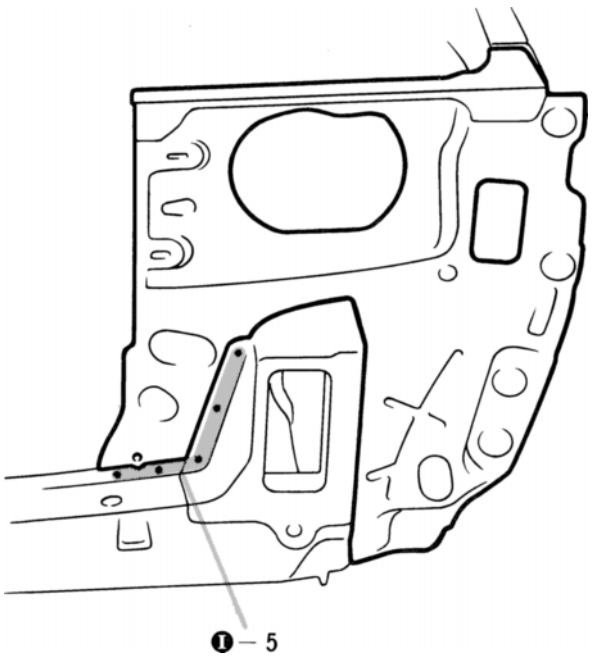

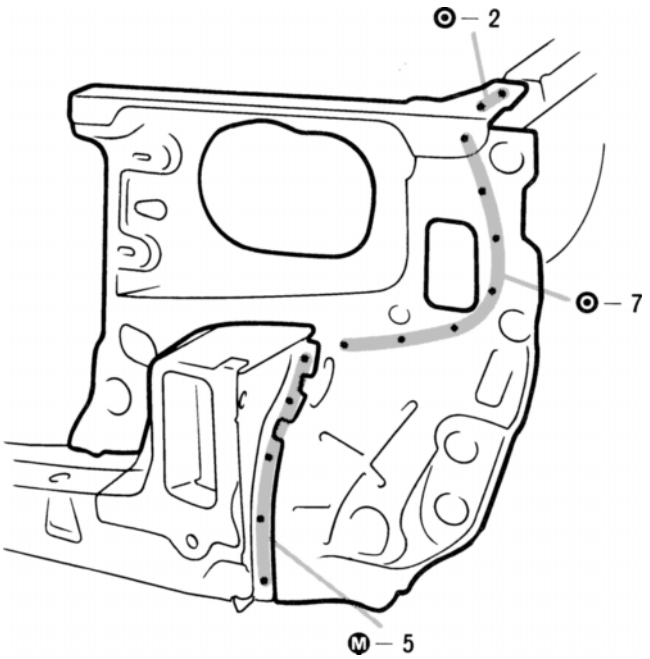

INSTALLATION

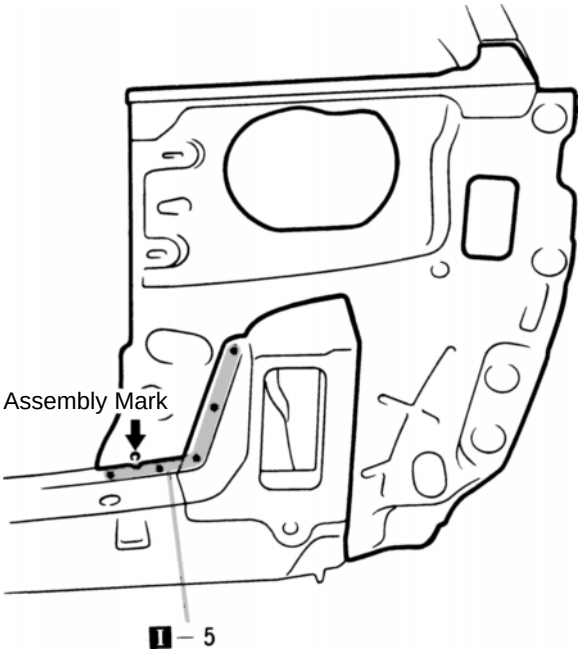

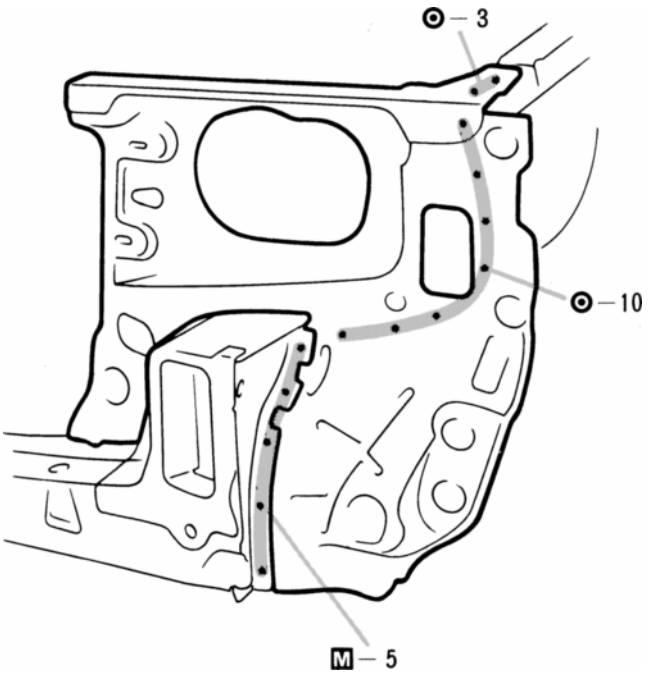

1. Temporarily install the new part with the assembly mark and measure each part in accordance with the body dimension diagram.

NOTE: Work after installing the radiator upper support.

FRONT CROSSMEMBER (ASSY)

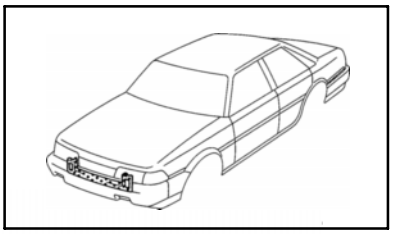

REMOVAL (With the radiator support removed.)

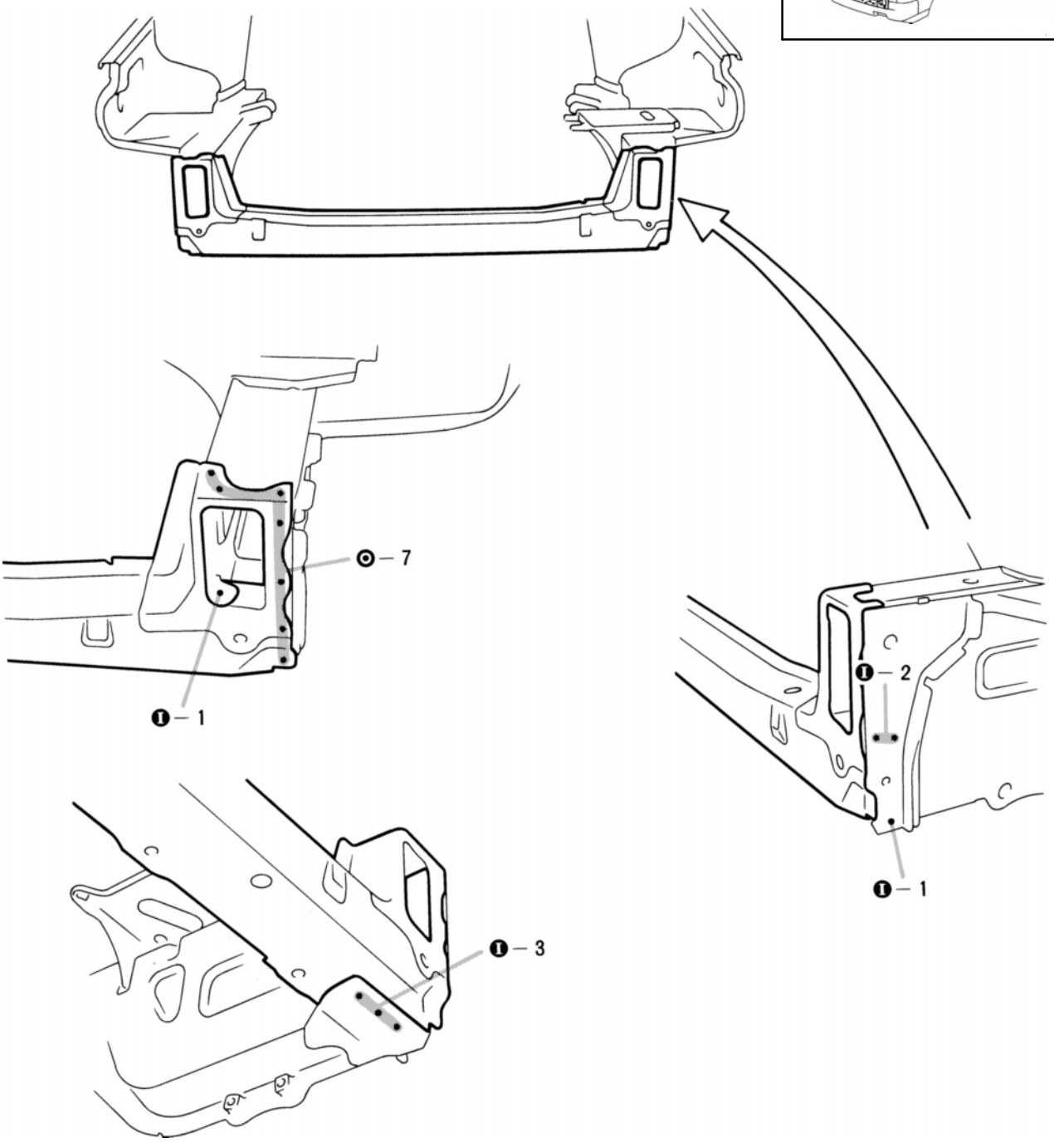

INSTALLATION

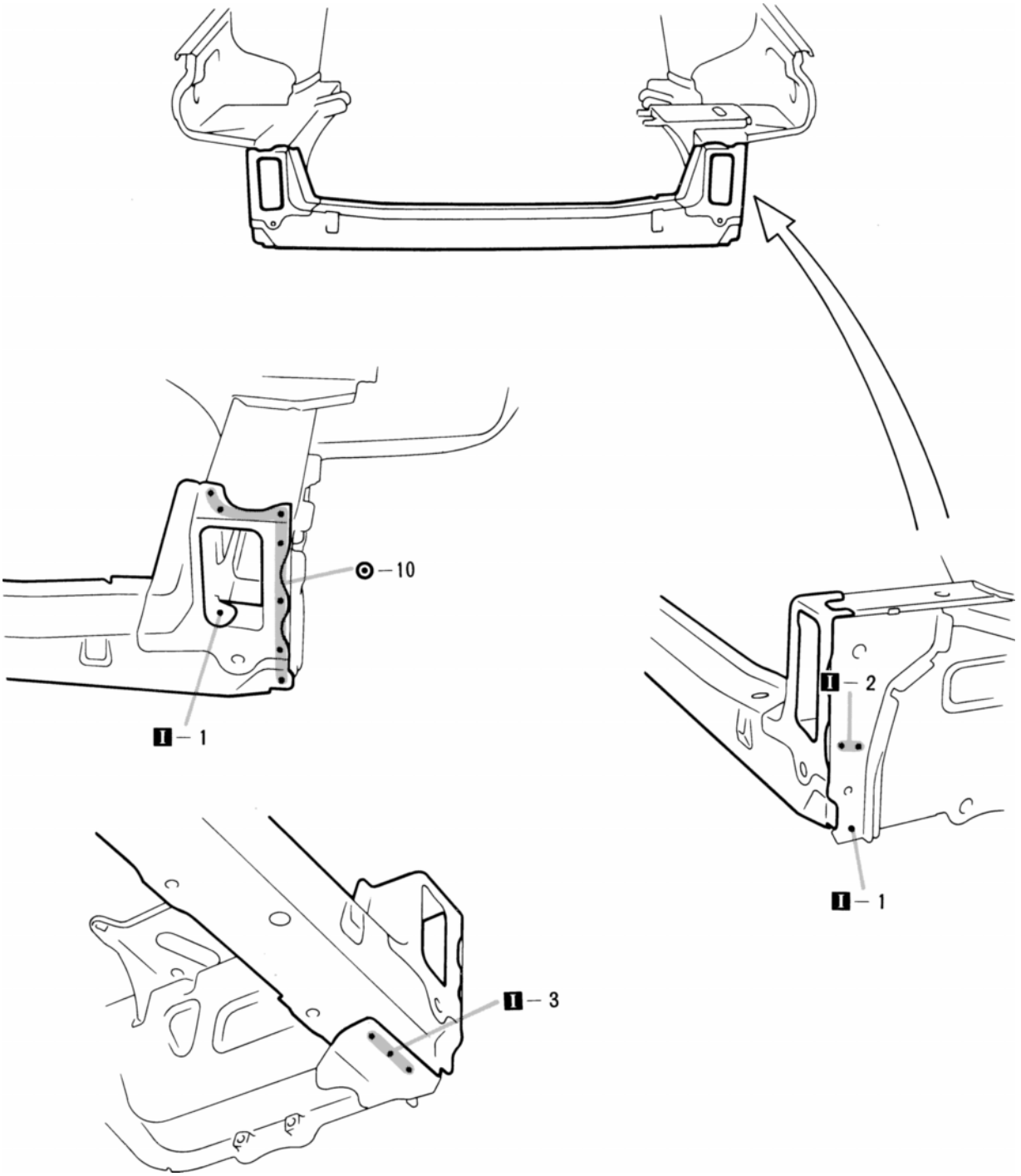

1. Temporarily install the new part and measure each part in accordance with the body dimension diagram.

FRONT FENDER APRON (ASSY)

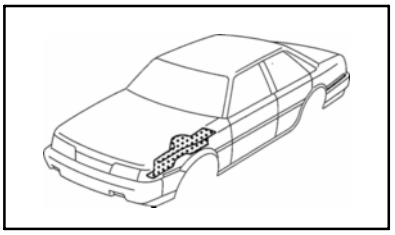

REMOVAL (With the radiator support removed.)

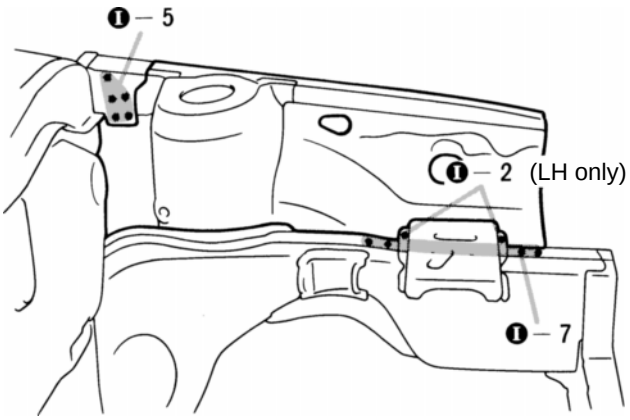

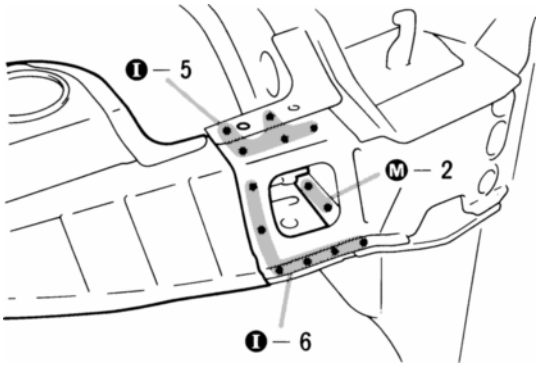

Front Body Pillar Lower Gusset

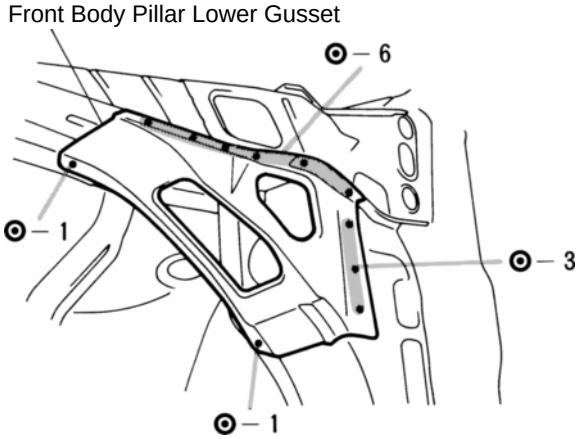

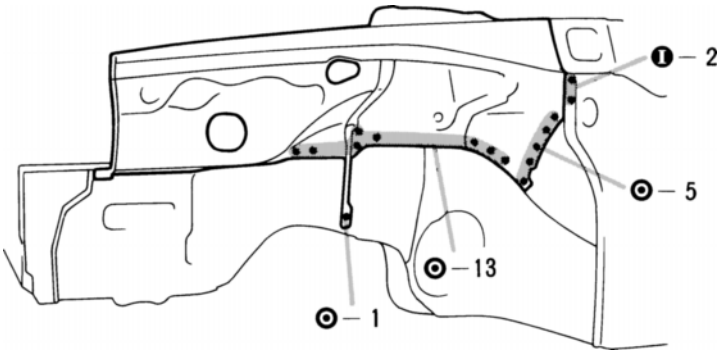

1. After removing the front body pillar lower gusset, remove the front fender apron.

INSTALLATION

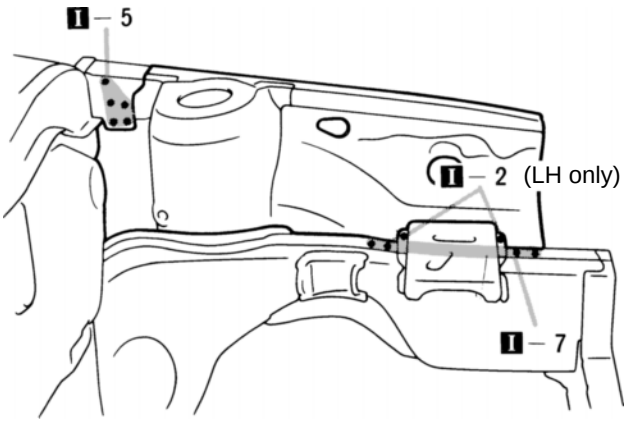

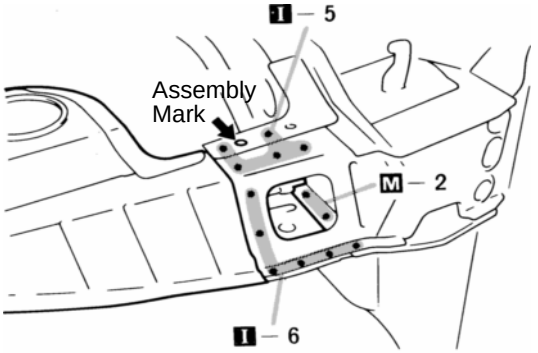

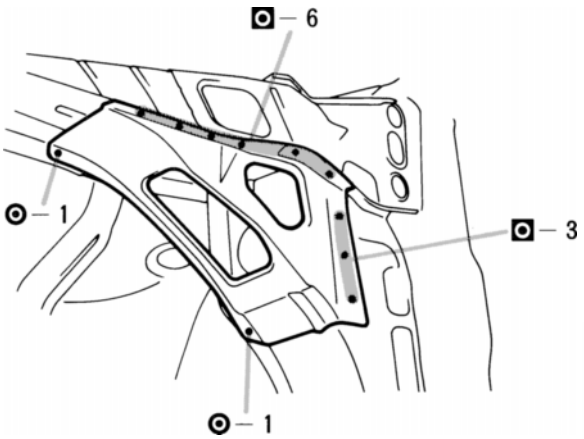

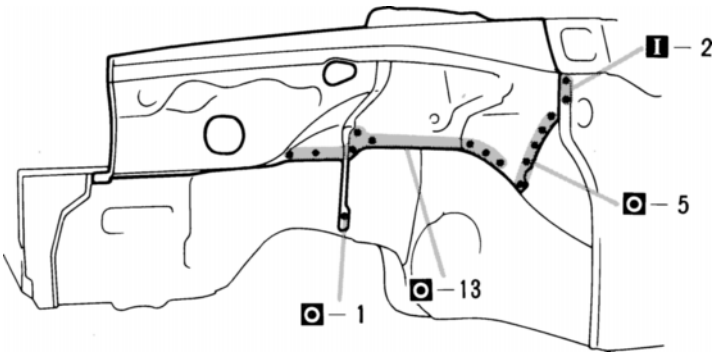

1. Determine the installation position of the new part by the assembly mark.
2. Measurements must be accurate with the body dimension diagram, as this effects the front wheel alignment.

NOTE: The position of the front spring support hole is very important.

3. Check the fit of the front fender and hood.

FRONT FENDER FRONT APRON (ASSY)

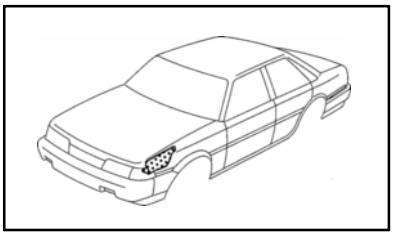

REMOVAL (With the radiator support removed.)

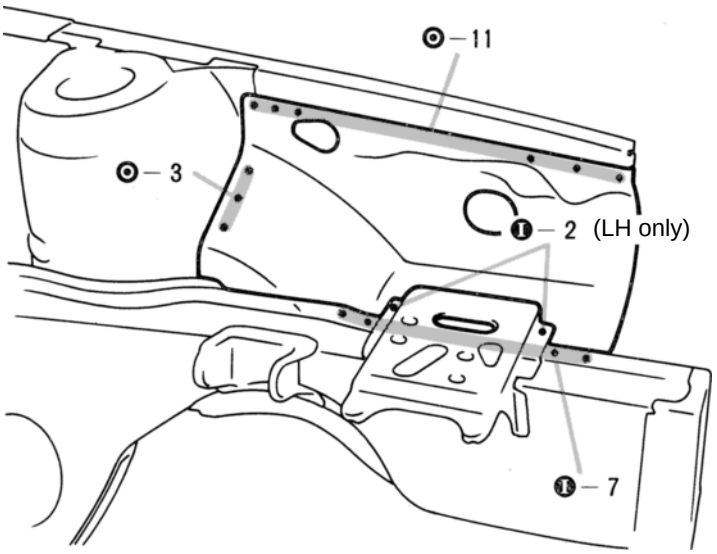

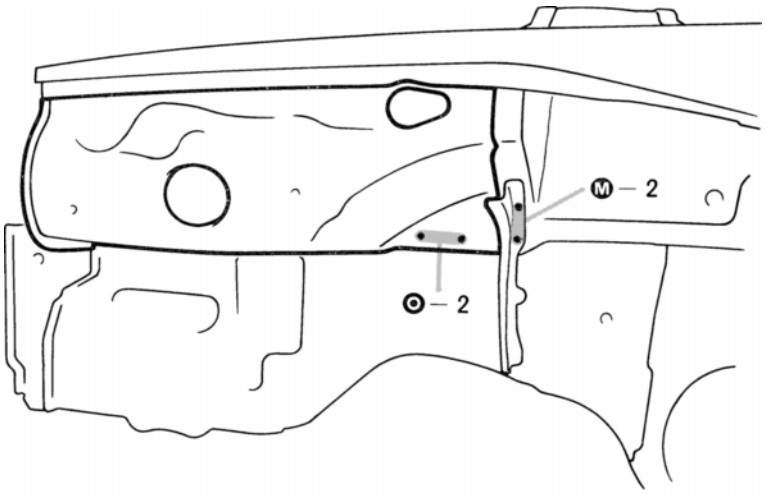

INSTALLATION

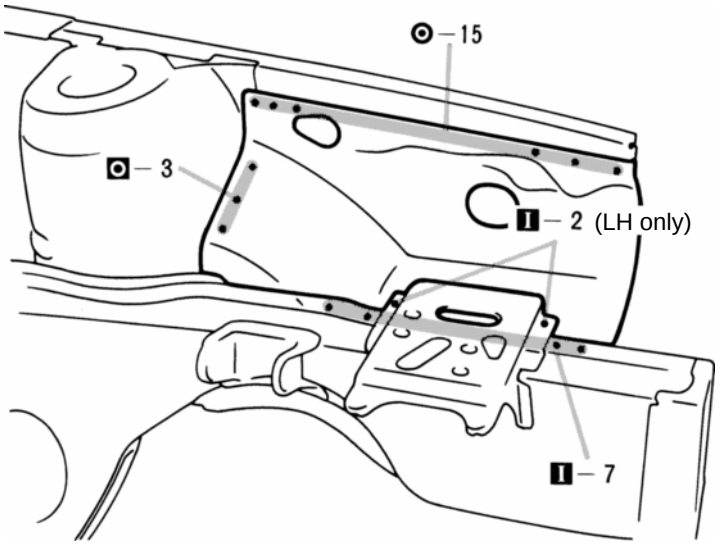

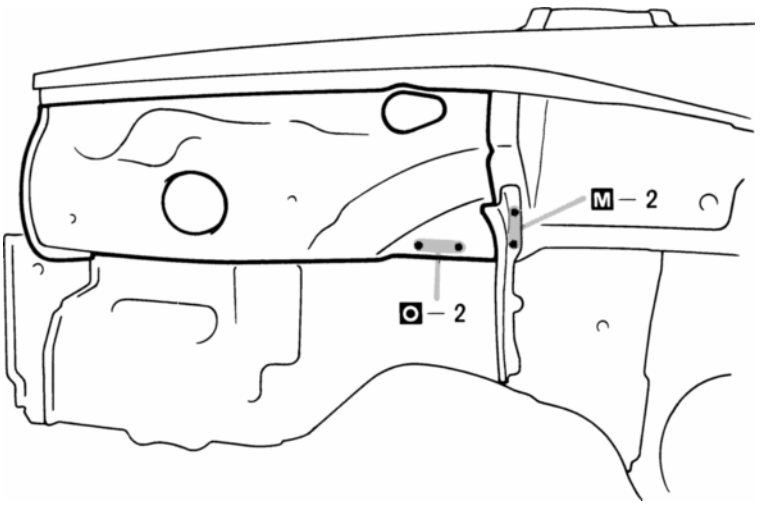

1. Temporarily install the new part and measure each part in accordance with the body dimension diagram.

FRONT SIDE MEMBER (ASSY)

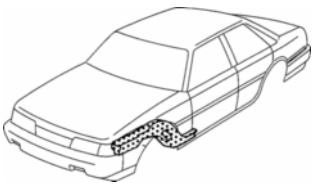

REMOVAL (With the front fender apron removed.)

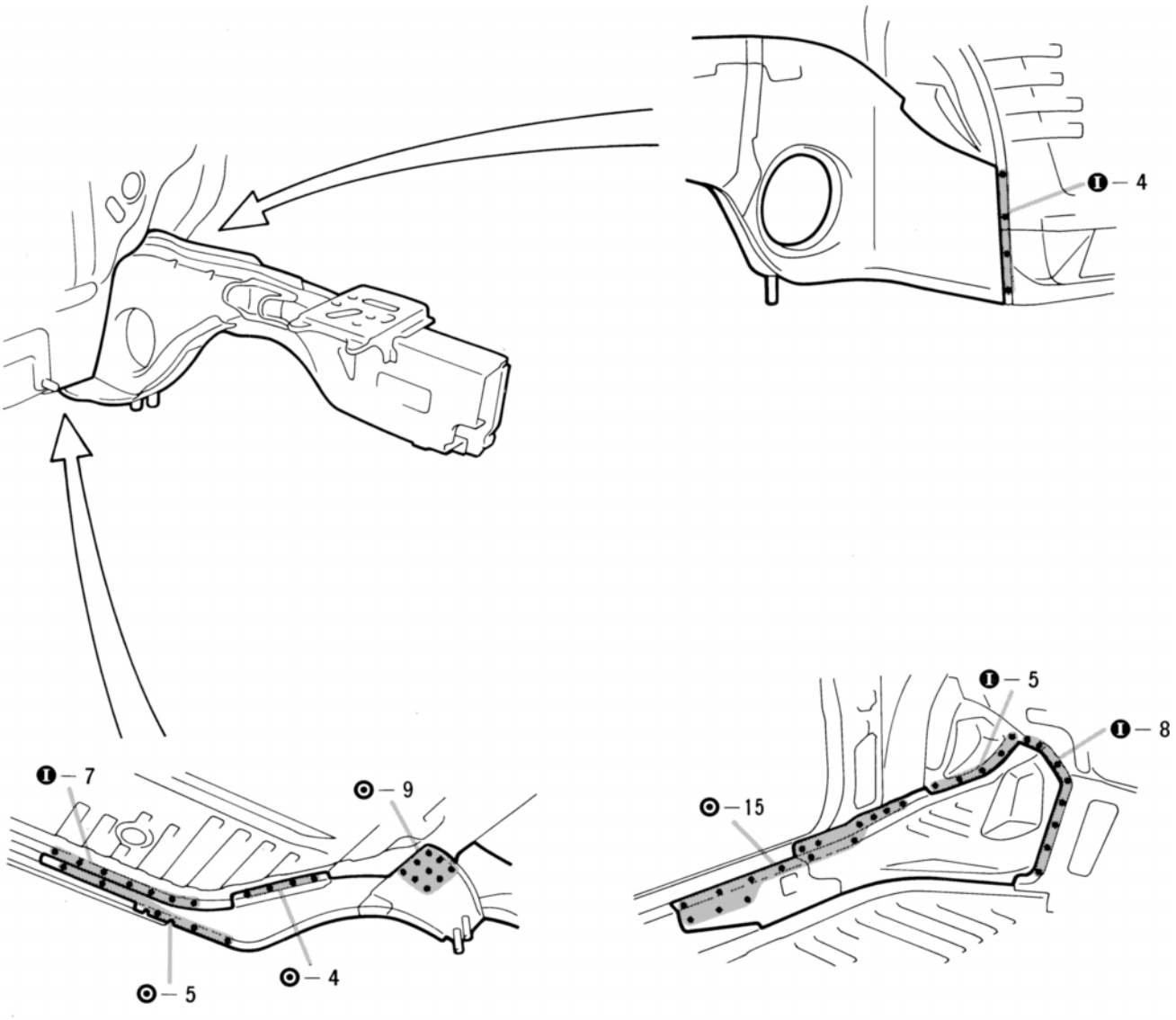

INSTALLATION

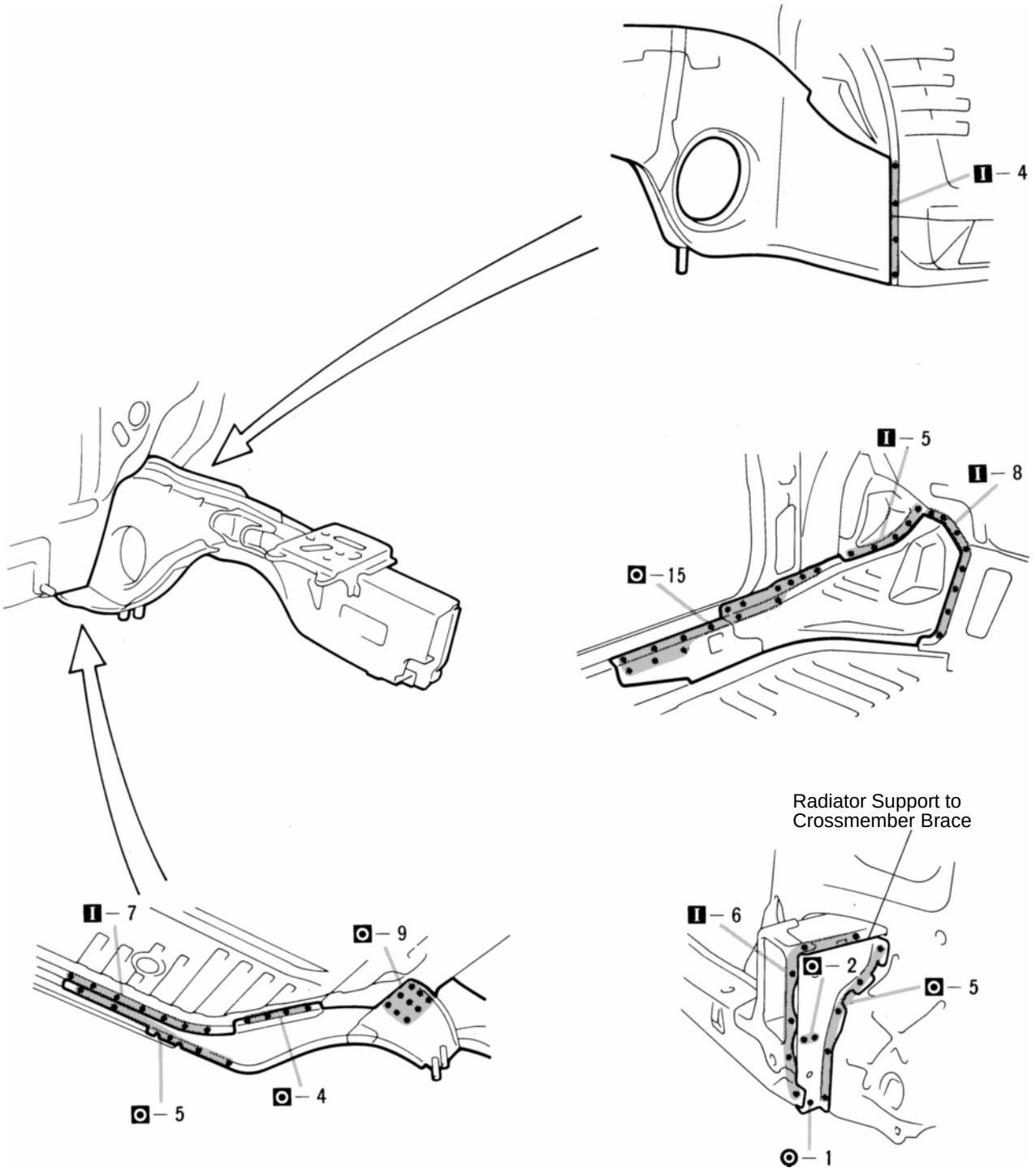

1. Temporarily install the new part and measure each part in accordance with the body dimension diagram.

NOTE: Make sure each measurement is correct, as this part effects the front wheel alignment.

FRONT SIDE MEMBER (CUT-P)

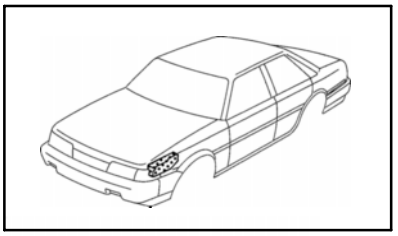

REMOVAL (With the front fender front apron removed.)

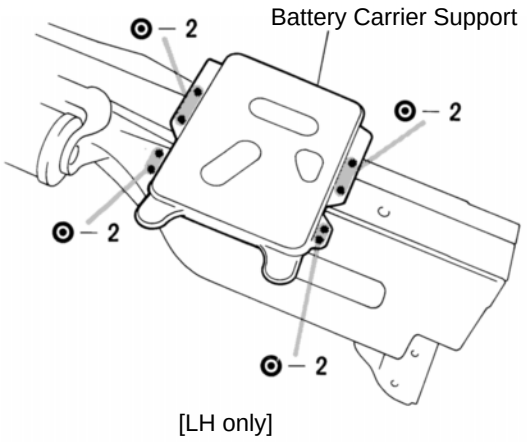

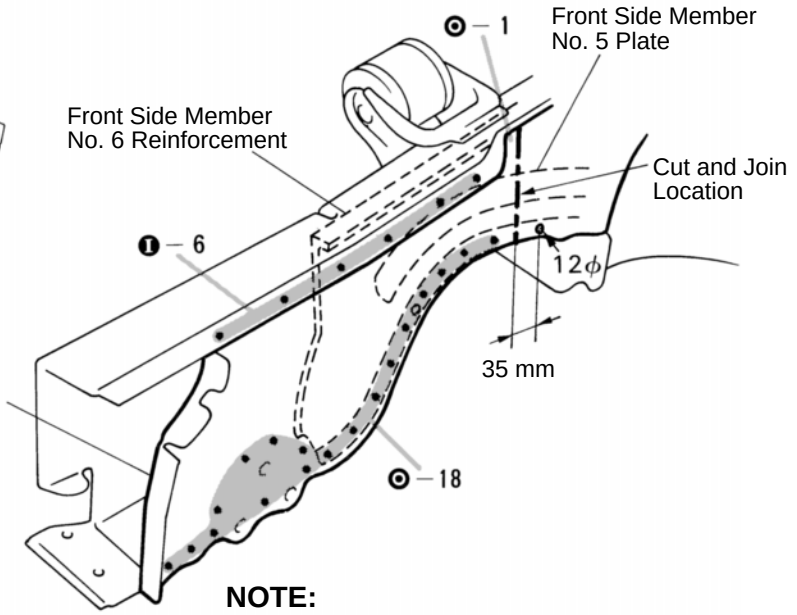

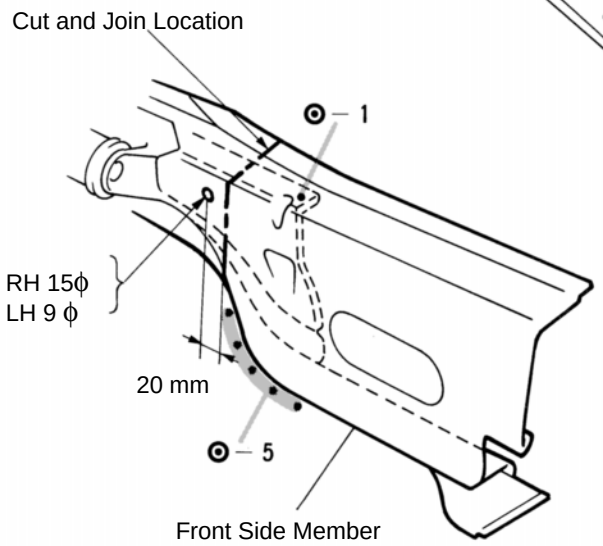

NOTE: Be careful not to damage the front side member No. 6 reinforcement when cutting the member.

NOTE:

1) Cut and join the front side member plate and front side member No. 5 plate at the same place.

2) Be careful not to damage the front side member No. 6 reinforcement when cutting the member plate.

[CROSS-SECTIONAL VIEW]

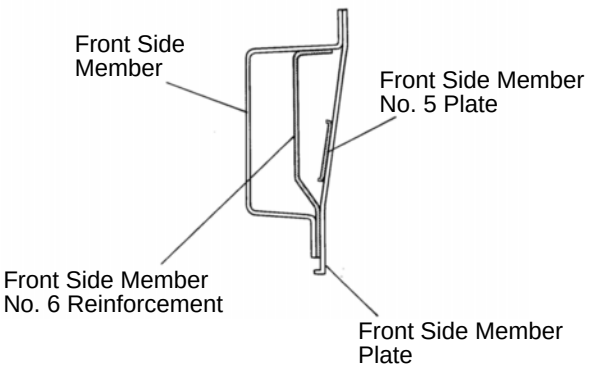

1. Before cutting the side member, remove the battery carrier support. (LH only)
2. Cut and join the side member at the areas as shown above.

NOTE:

1) Cut and join the front side member plate and the front side member No. 5 plate at the same place.

2) Be careful not to damage the front side member No. 6 reinforcement when cutting the members.

INSTALLATION

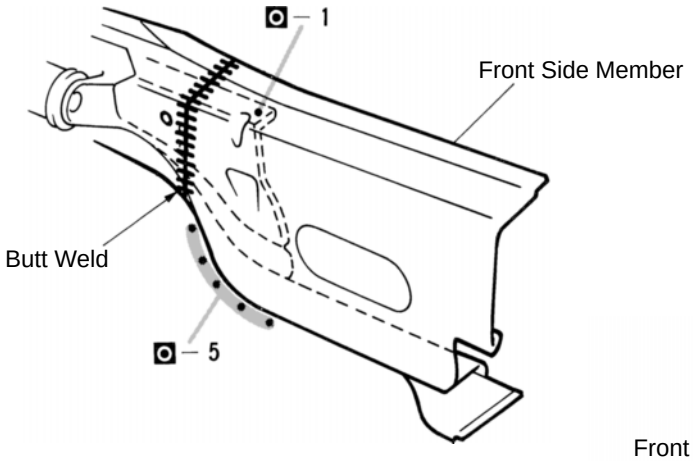

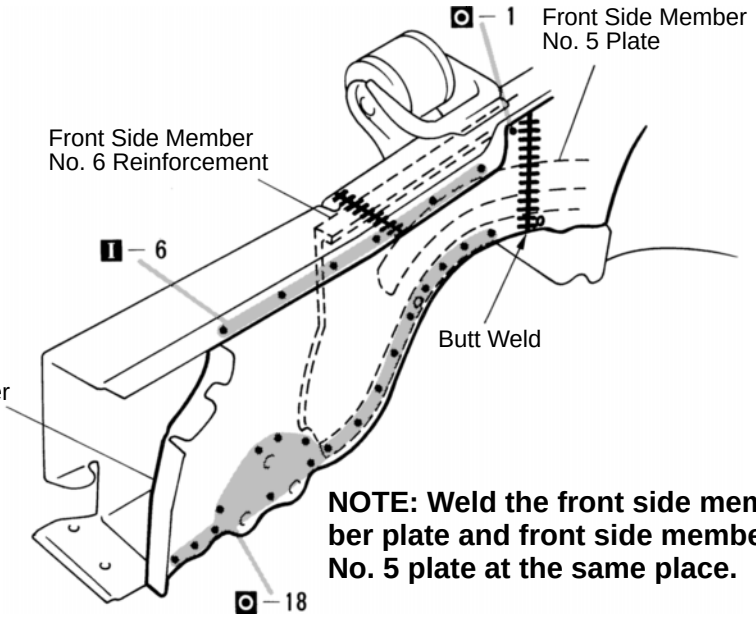

NOTE: Weld the front side member plate and front side member No. 5 plate at the same place.

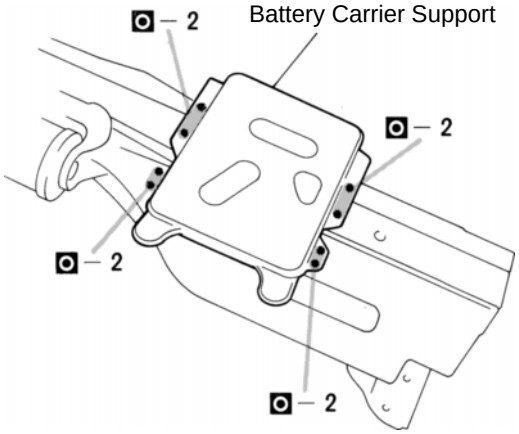

[LH only]

1. Cut the supply part in the same way as removal.
2. Temporarily install the new part, measure each part in accordance with the body dimension diagram.
3. After installing the new side member, install the battery carrier support. (LH only)

COWL TOP SIDE PANEL (ASSY)

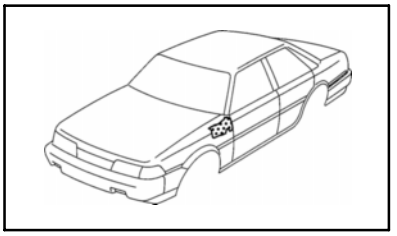

REMOVAL

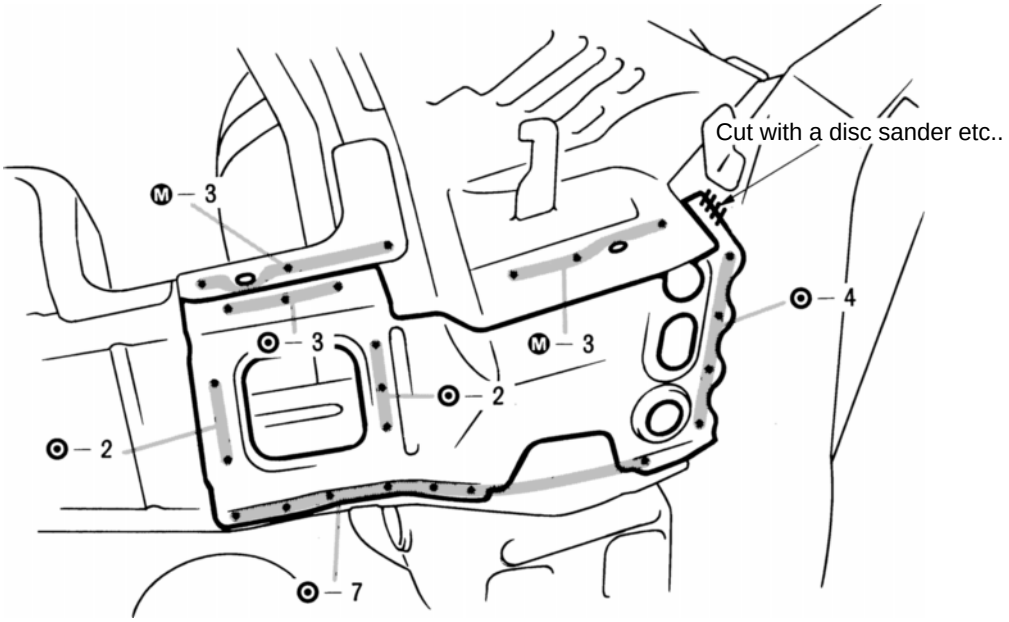

INSTALLATION

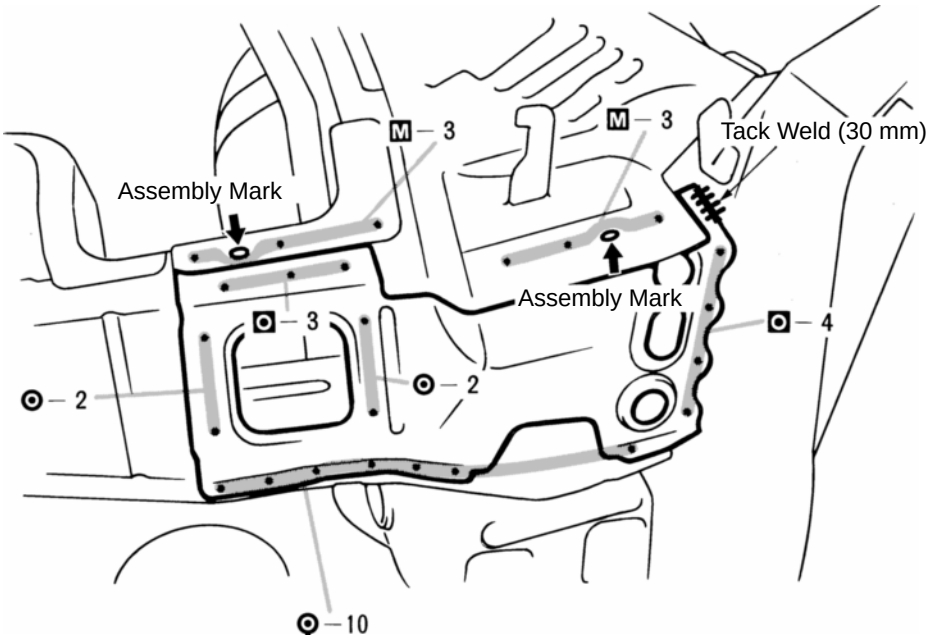

mm	in.
30	1.18

1. Determine the installation position of the new part by the assembly mark.

FRONT BODY PILLAR (CUT)

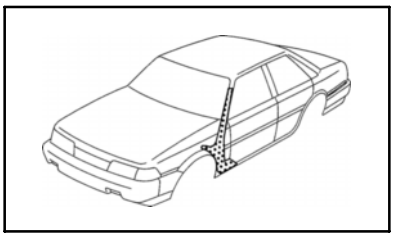

REMOVAL

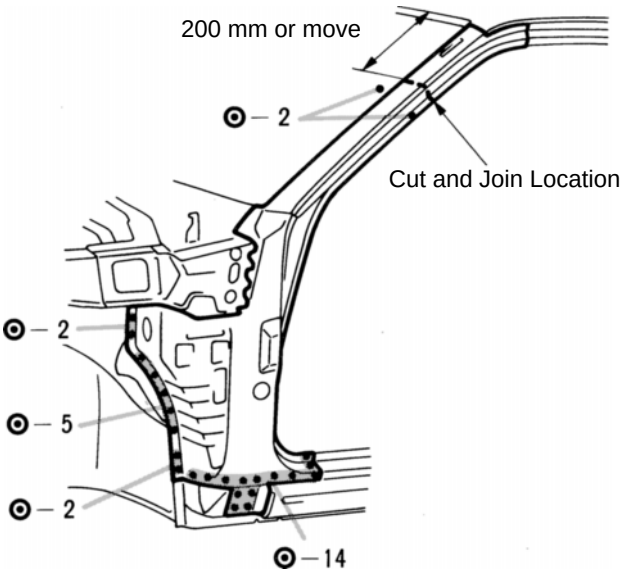

[Cut and Join Location]

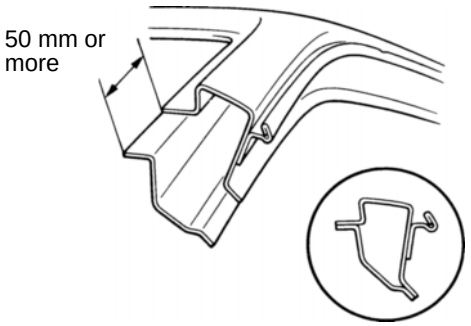

Front Body Pillar Lower Gusset

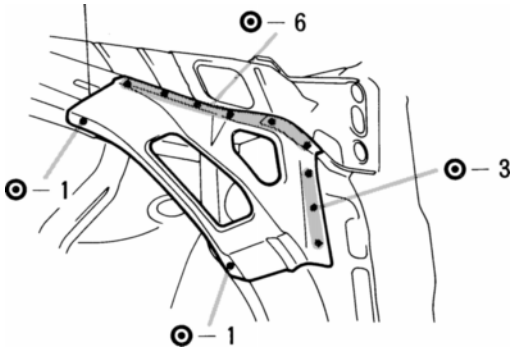

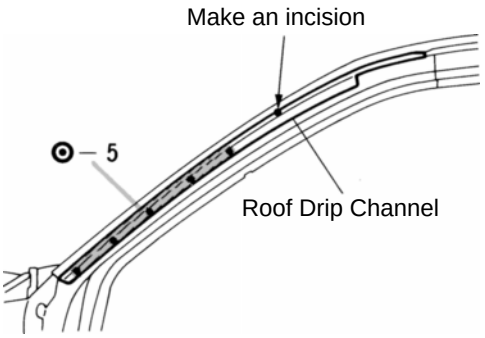

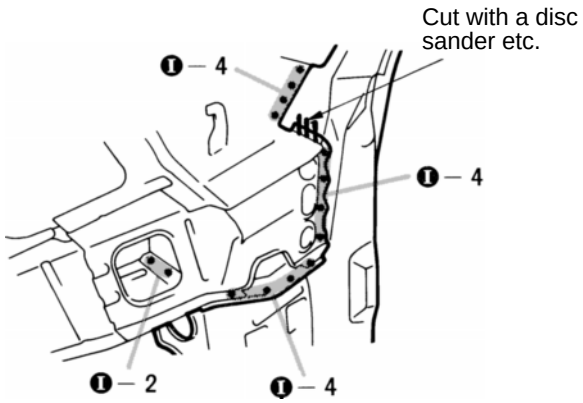

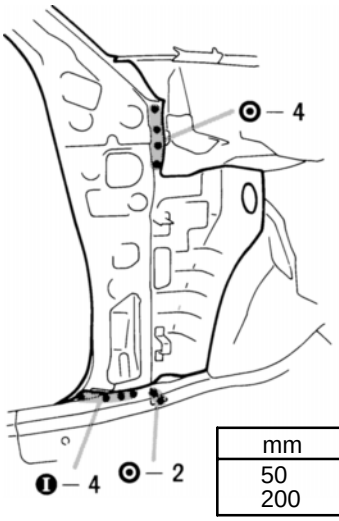

mm	in.
50	1.97
200	7.87

1. Cut and join the new part at the location as shown above.

NOTE:

1) Avoid the antenna installation hole for the cut and join location.

2) As shown above, cut and join the front body pillar outer and inner panels at a position shifted above 50 mm (1.97 in.).

3) Before cutting, remove the antenna cord and drain hole of the moonroof.

2. Remove the weld points of the roof drip channel, make an incision of it and bend it.

INSTALLATION

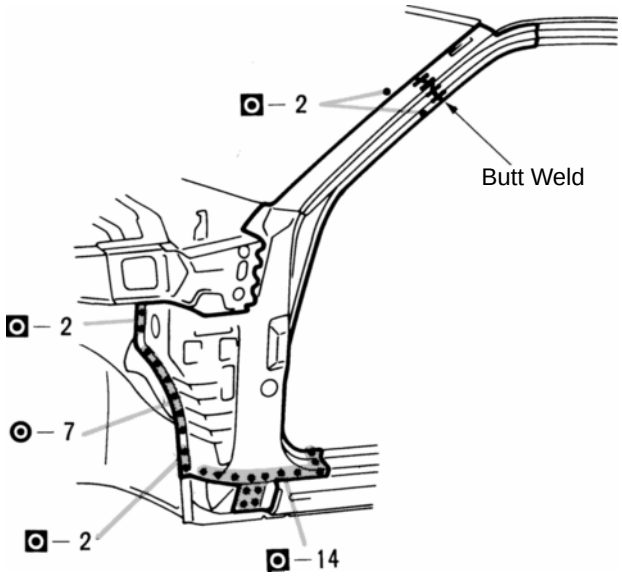

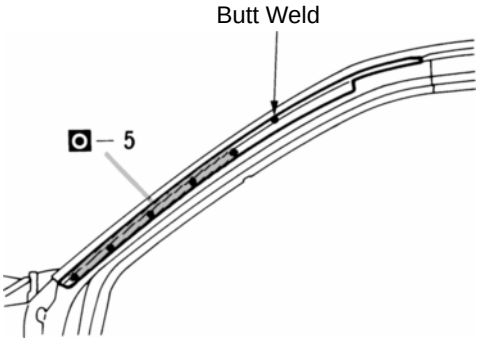

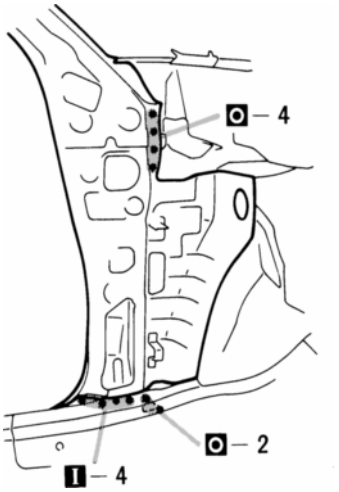

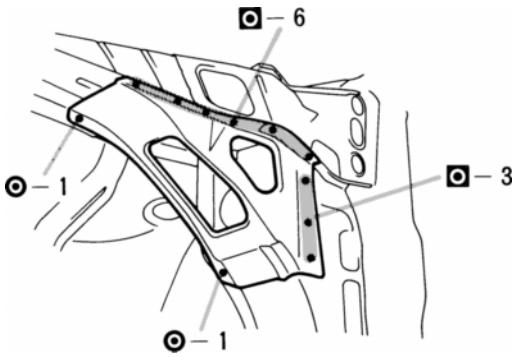

[Reference]

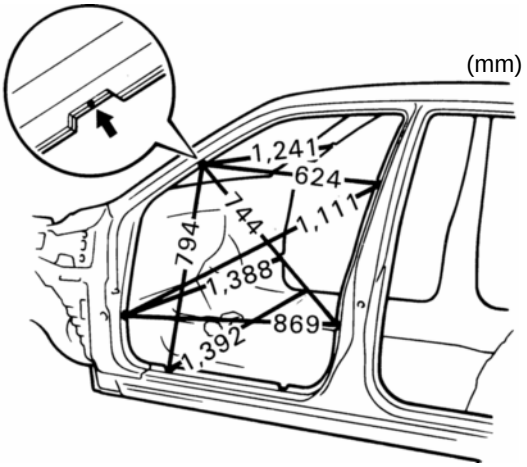

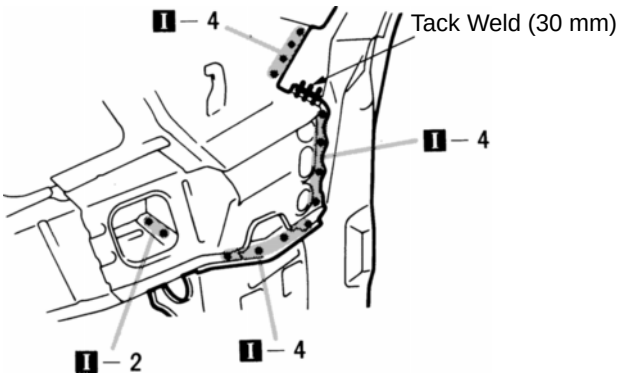

1. Temporarily install the new part and check fit for the front fender, hood and windshield glass.

mm	in.
30	1.18
624	24.57
744	29.29
794	31.26
869	34.21
1,111	43.74
1,241	48.86
1,388	54.65
1,392	54.80

CENTER BODY PILLAR (CUT)

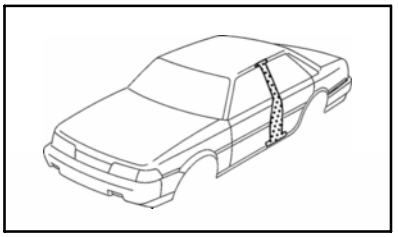

REMOVAL

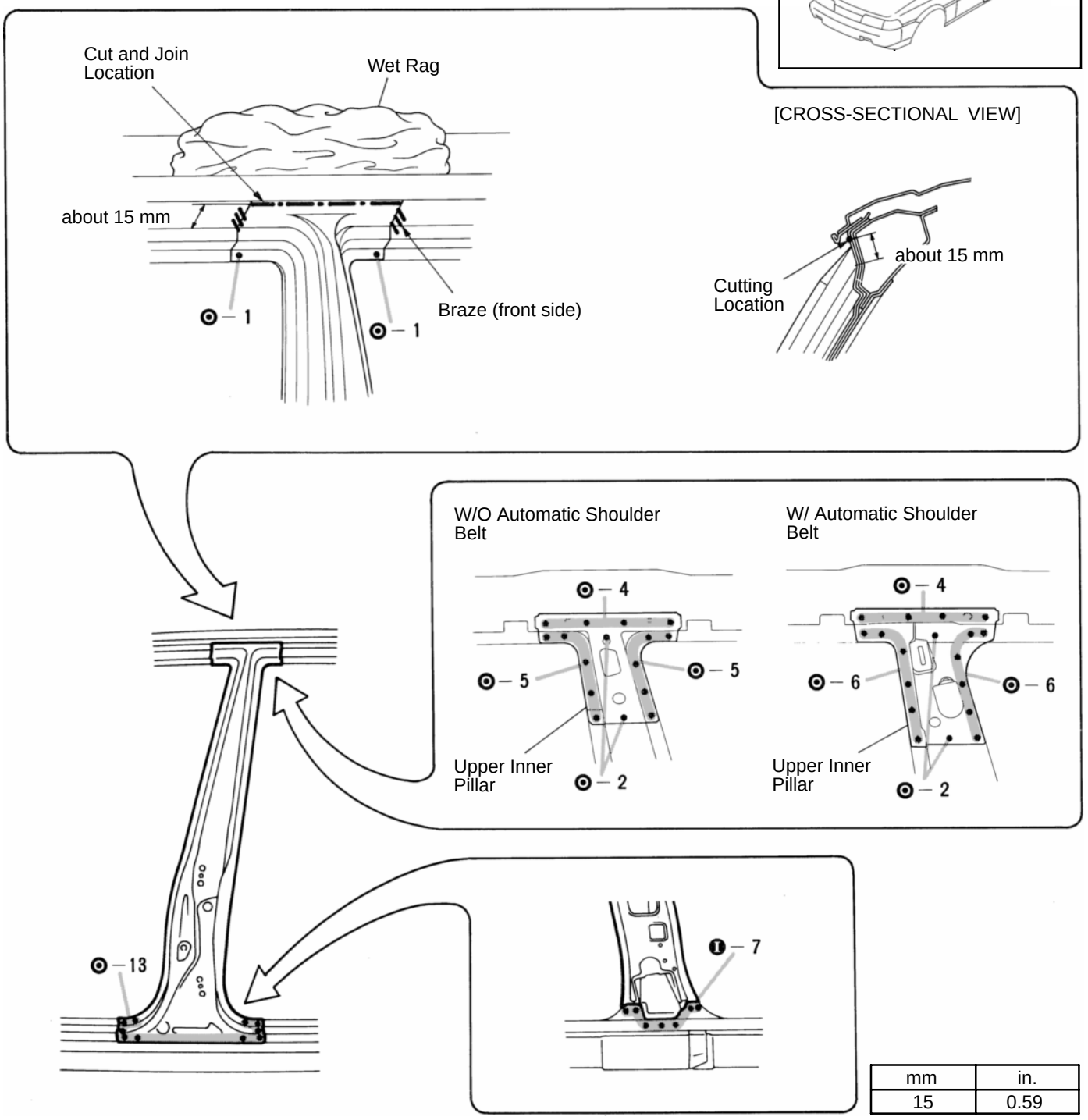

mm	in.
15	0.59

1. Cut and join the outer pillar at the location as shown above.

NOTE: Be careful not to damage the roof side outer rail when cutting the outer pillar with a cut grinder or such.

2. Heat the brazed areas of the roof side outer rail and scrape it with a wire brush.

NOTE: Before performing these operations, place a wet rag on the roof panel to protect it from damage.

INSTALLATION

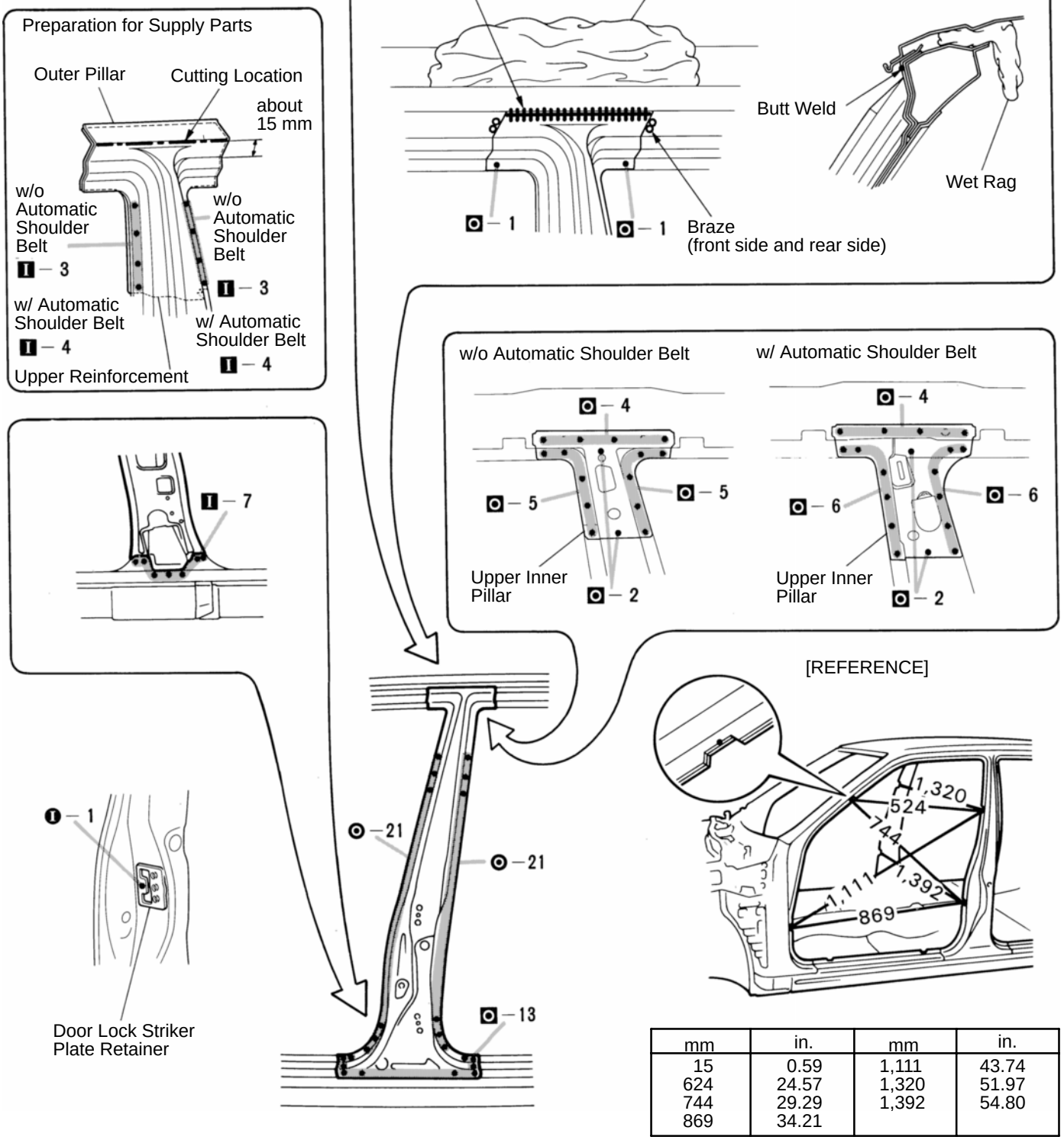

mm	in.	mm	in.
15	0.59	1,111	43.74
624	24.57	1,320	51.97
744	29.29	1,392	54.80
869	34.21		

[Preparation for supply parts]

1. After installing the upper reinforcement to the outer pillar, cut them at the location as shown above.

[Installation]

1. After temporarily installing the new part, check fit for the front and rear door.
2. After butt welding the new joint with a MIG welder, sand the weld joint with a sander.

NOTE: Before performing these operations, place a wet rag on the roof panel to protect it from damage.

3. Braze the roof side outer rail and center pillar connection.

NOTE: Smooth down the surface.
Rail leakage will occur if the weather strip contact is defective.

OUTER ROCKER PANEL (CUT)

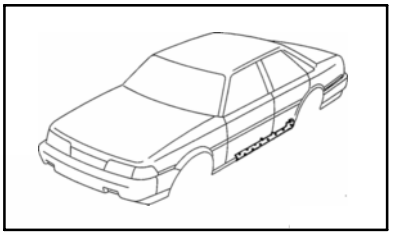

REMOVAL

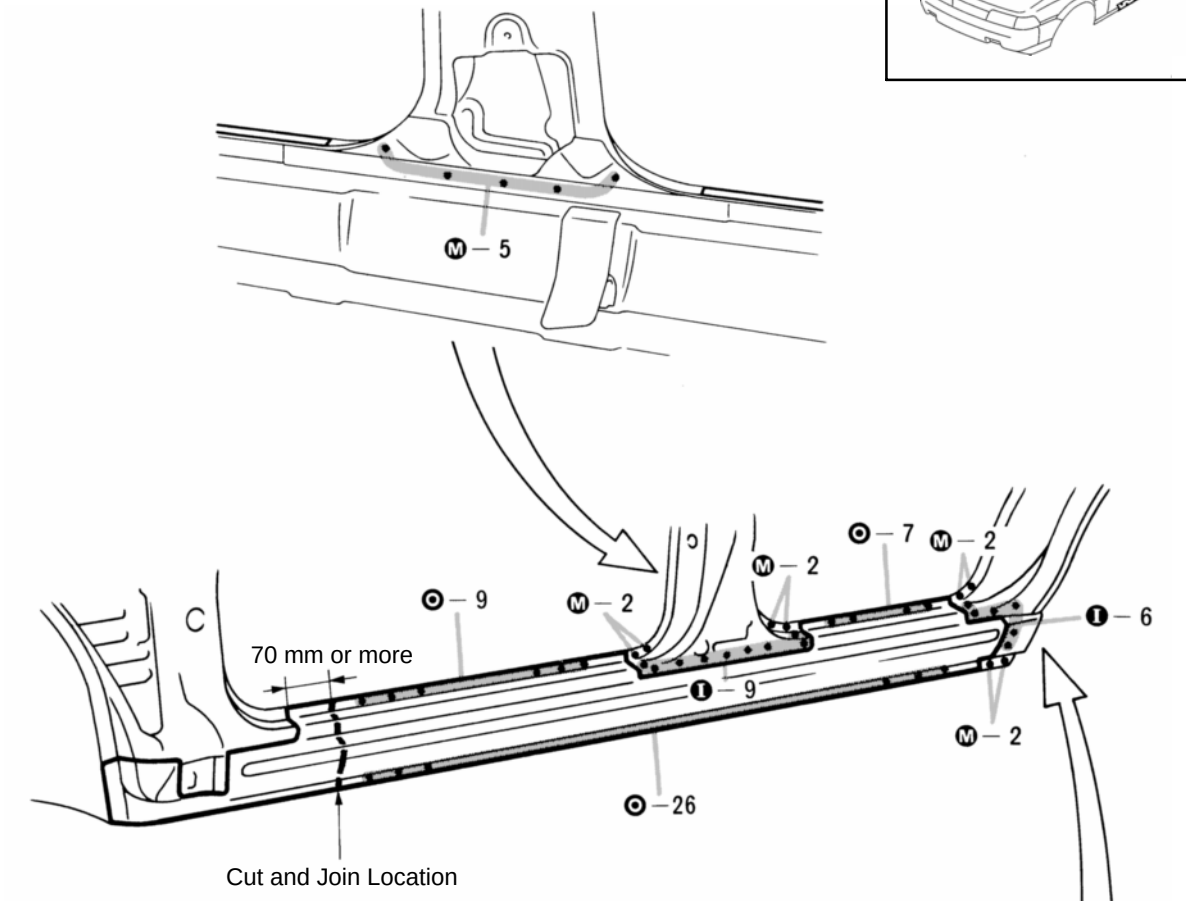

[Cut and Join Location]

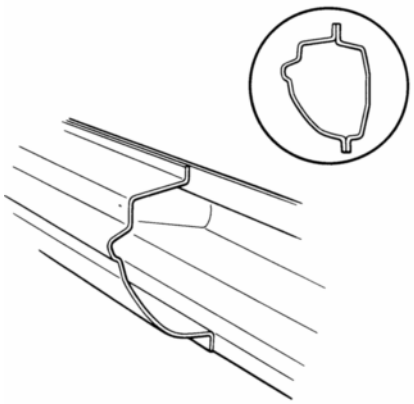

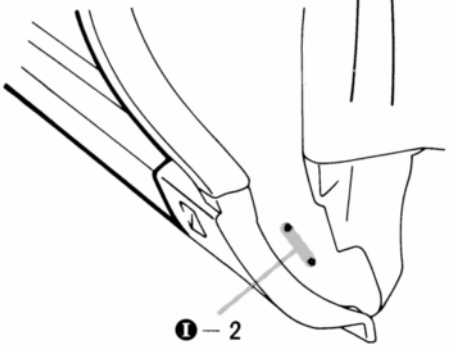

mm	in.
70	2.76

1. Cut and join the part at the area as shown above.

INSTALLATION

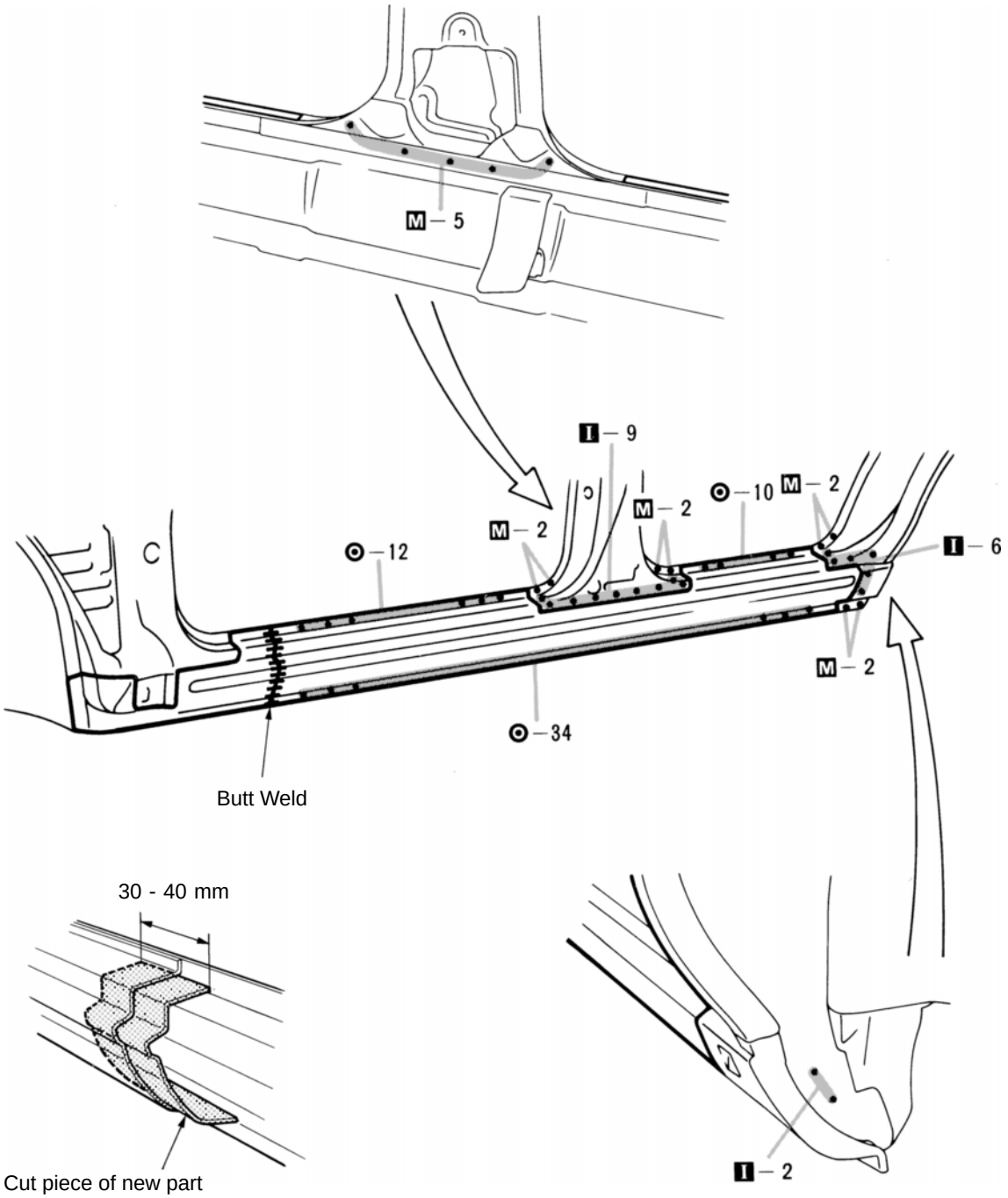

mm	in.
30	1.18
40	1.57

1. Temporarily install the new part and check fit for the front door, rear door and front fender.

ROOF PANEL (ASSY) SEDAN W/O MOONROOF

Sedan

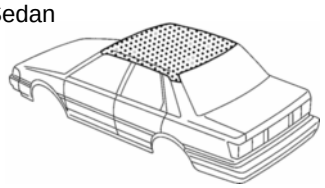

REMOVAL

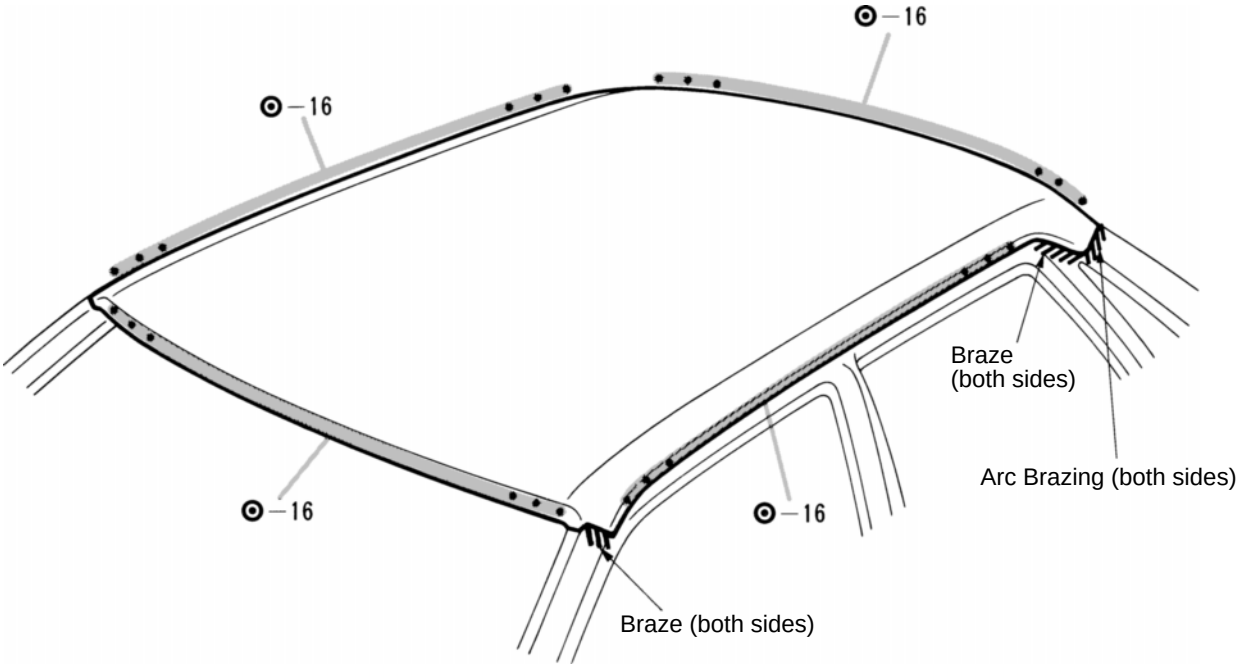

1. Heat the brazed area of the front body pillar and quarter panel and scrape off the brazing with a wire brush.

NOTE: Be careful not to overheat the front body pillar and quarter parcel.

2. Cut off the roof panel tip at the quarter panel arc brazing connection with a cut grinder.

INSTALLATION

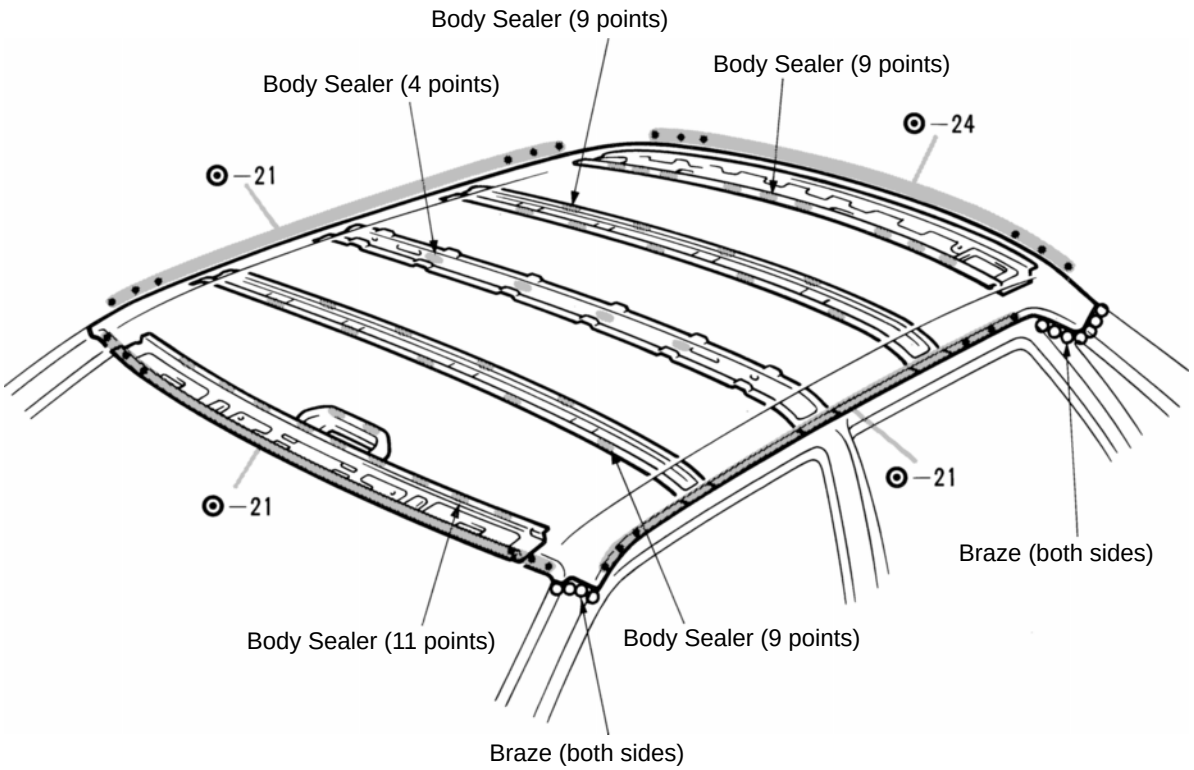

1. Before temporarily installing the new part, apply body sealer to the windshield header panel, roof panel reinforcement and back window opening frame.

NOTE:

1) Apply just enough sealer for the new part to make contact.

2) For other sealing points, refer to section AR.

2. Braze the front body pillar and quarter panel connection.

NOTE: Before performing these operations, place a wet rag on the roof panel to protect it from damage.

ROOF PANEL (ASSY) SEDAN W/ MOONROOF

Sedan

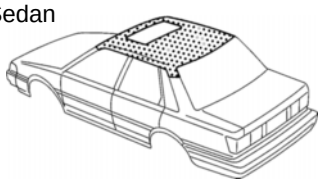

REMOVAL

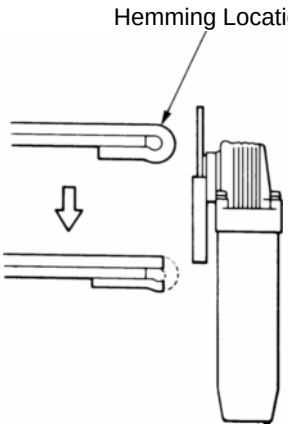

Disc Sander

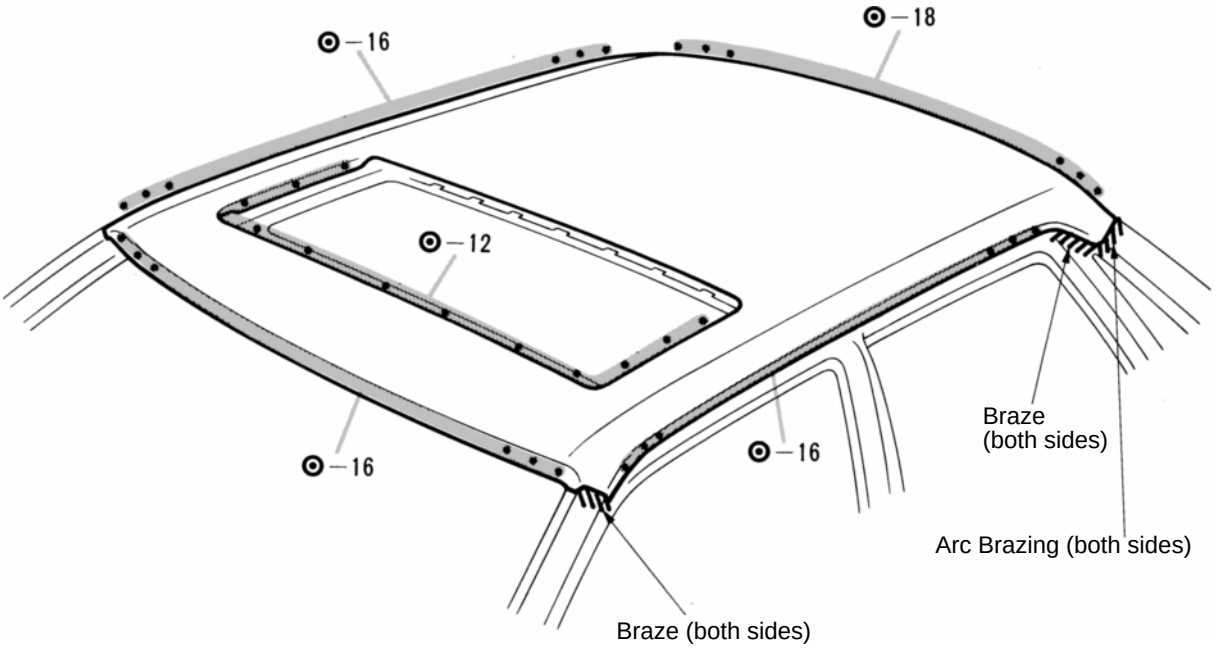

1. If reusing the roof panel reinforcement, slightly heating the roof panel will soften sealer and make removal easier.

INSTALLATION

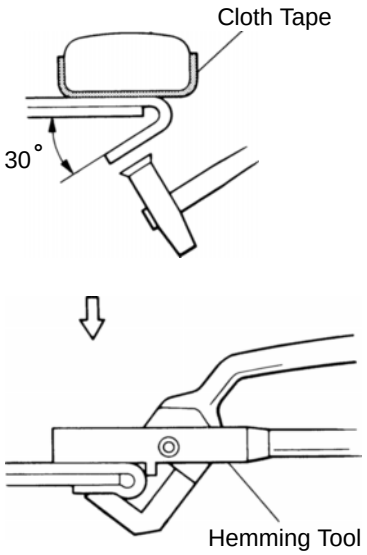

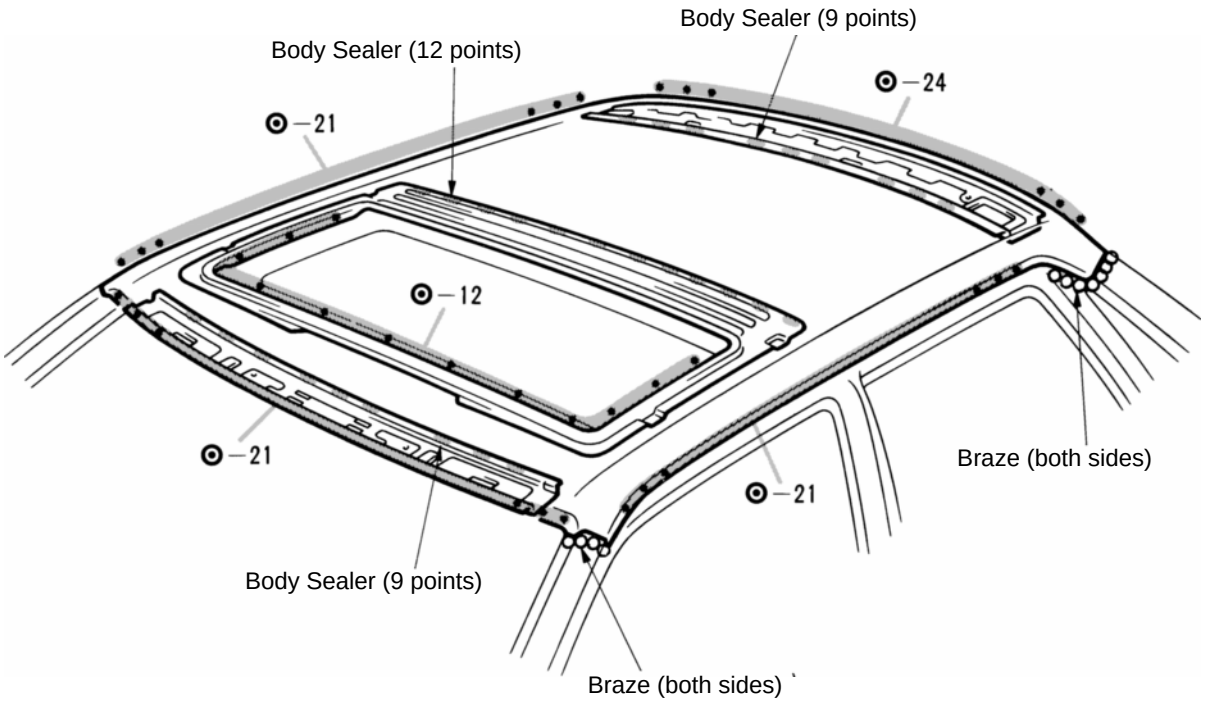

1. Before temporarily installing the new part, apply body sealer to the windshield header panel, roof panel reinforcement and back window opening frame.

NOTE:

1) Apply just enough sealer for the new part to make contact.

2) For other sealing points, refer to section AR.

2. Hem the area tip of the roof panel opening.

NOTE:

1) Bend the flange hem about 30° with a hammer and dolly. Then fasten tightly with a hemming tool.

2) Perform hemming three steps, being careful not to warp the panel.

ROOF PANEL (ASSY) WAGON W/O MOONROOF

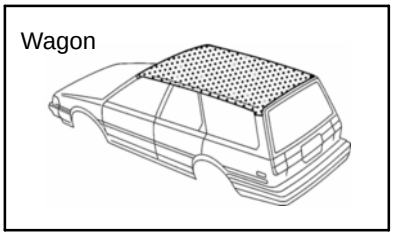

REMOVAL

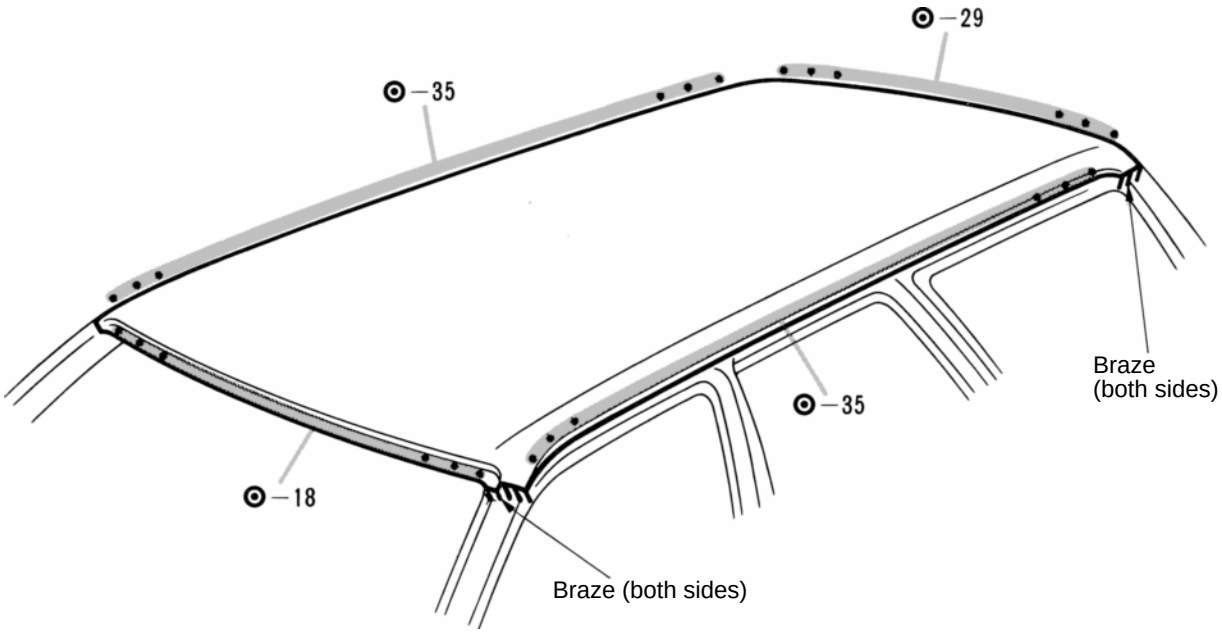

1. Heat the brazed area of the front body pillar and quarter panel and scrape off the brazing with a wire brush.

NOTE: Be careful not to overheat the front body pillar and quarter panel.

INSTALLATION

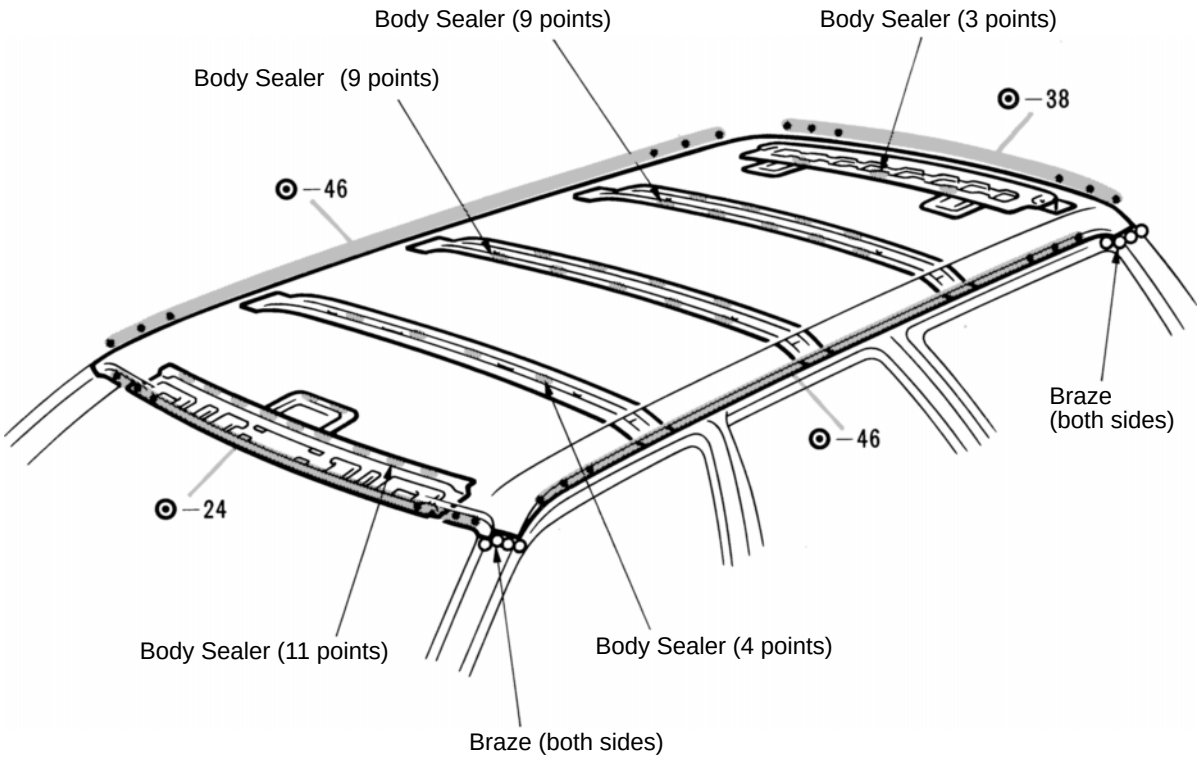

1. Before temporarily installing the new part, apply body sealer to the windshield header panel, roof panel reinforcement and back door opening frame.

NOTE:

1) Apply just enough sealer for the new parr to make contact.

2) For other sealing points, refer to section AR.

2. Braze the front body pillar and quarter panel connections.

NOTE: Before performing these operations, place a wet rag on the roof panel to protect it from damage.

ROOF PANEL (ASSY) WAGON W/ MOONROOF

Wagon

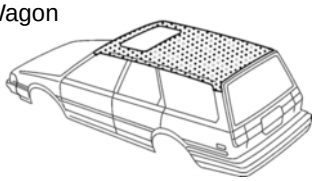

REMOVAL

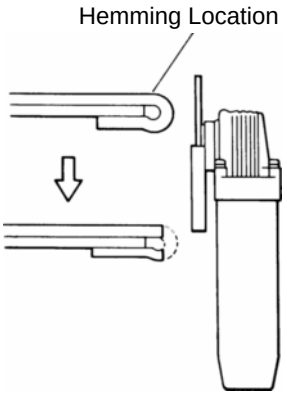

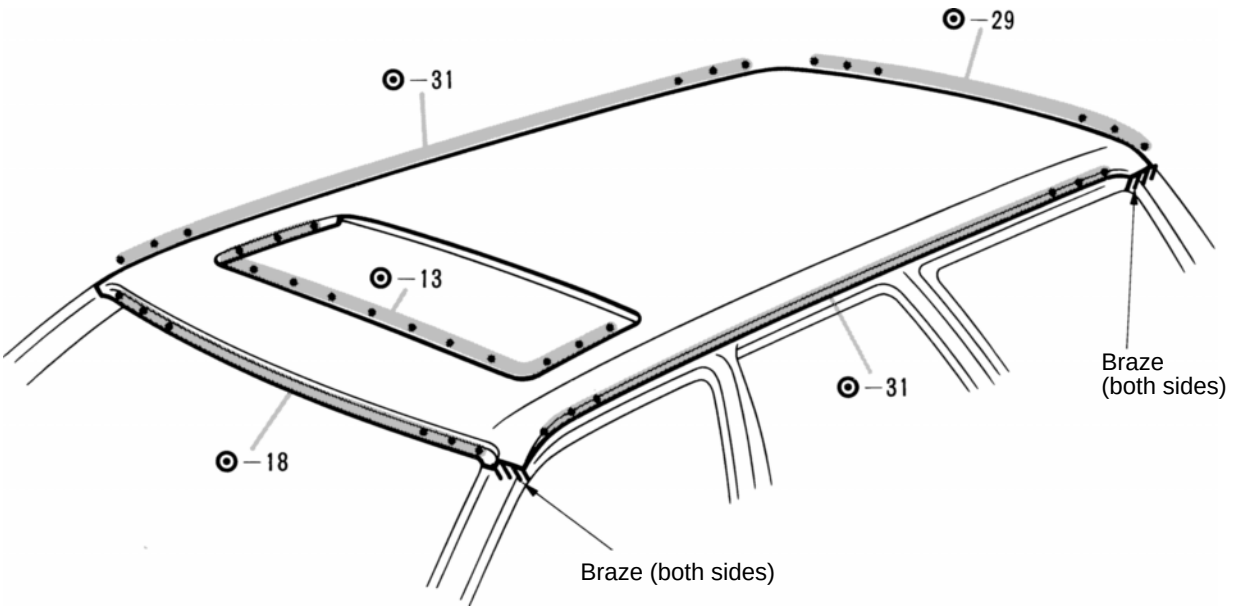

1. If reusing the roof panel reinforcement, slightly heating the roof panel will soften sealer and make removal easier.

INSTALLATION

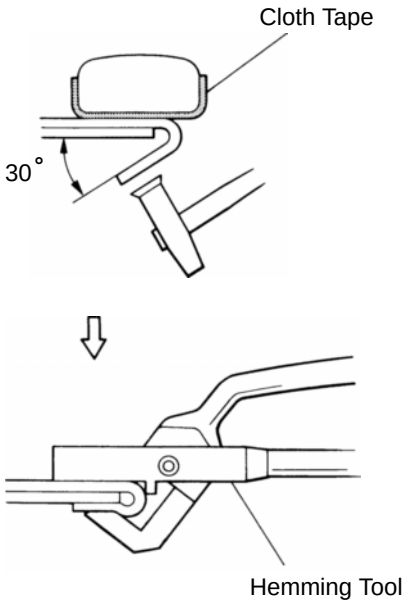

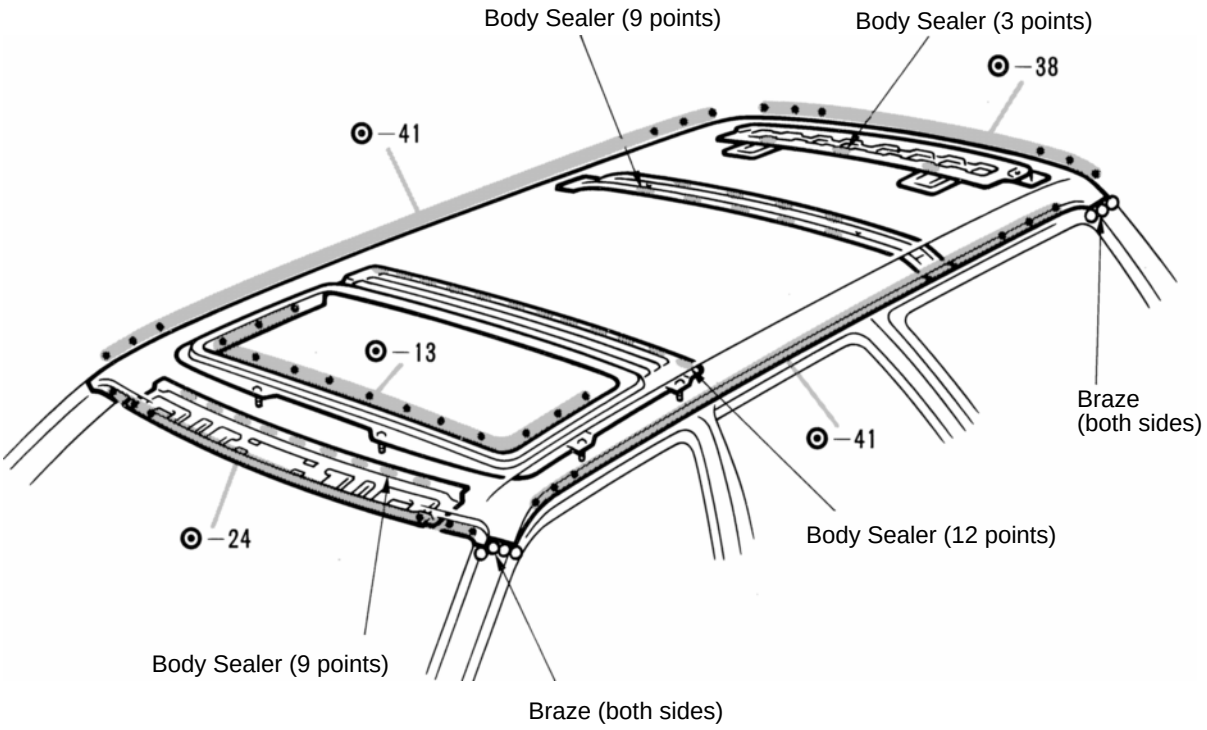

1. Before temporarily installing the new part, apply body sealer to the windshield header panel, roof panel reinforcement and back door opening frame.

NOTE:

1) Apply just enough sealer for the new part to make contact.

2) For other sealing points, refer to section AR.

2. Hem the area tip of the roof panel opening.

NOTE:

1) Bend the flange hem about 30° with a hammer and dolly. Then fasten tightly with a hemming tool.

2) Perform hemming three steps, being careful not to warp the panel.

FRONT DOOR OUTER PANEL (ASSY)

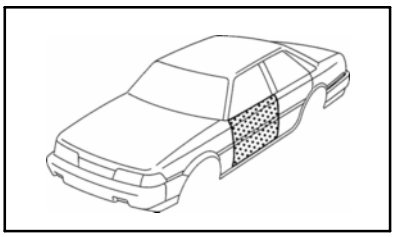

REMOVAL

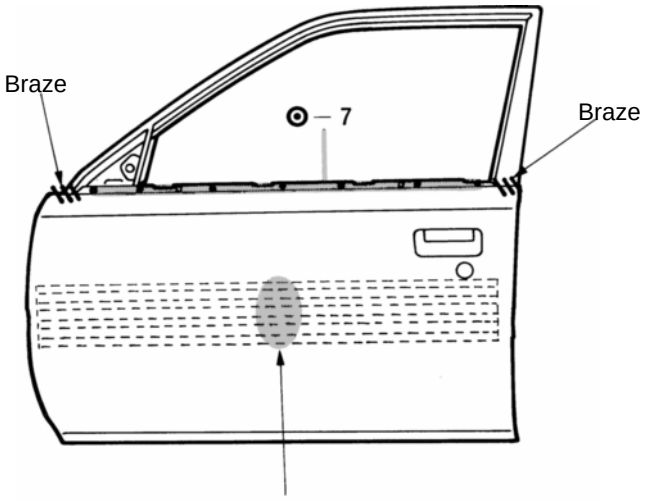

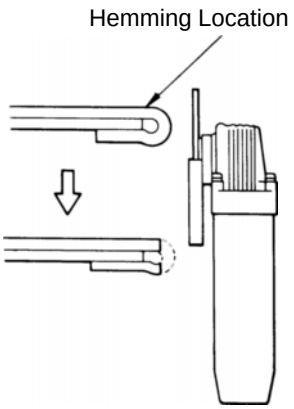

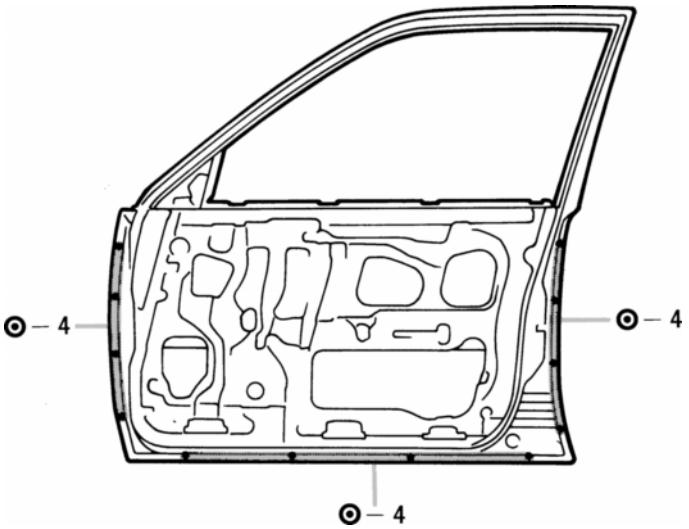

1. Grind out the hemming location, and remove the outer panel.

NOTE: Slightly heatinq the outer panel will soften the sealer and make removal easier.
(w/ front door side impact protection beam)

INSTALLATION

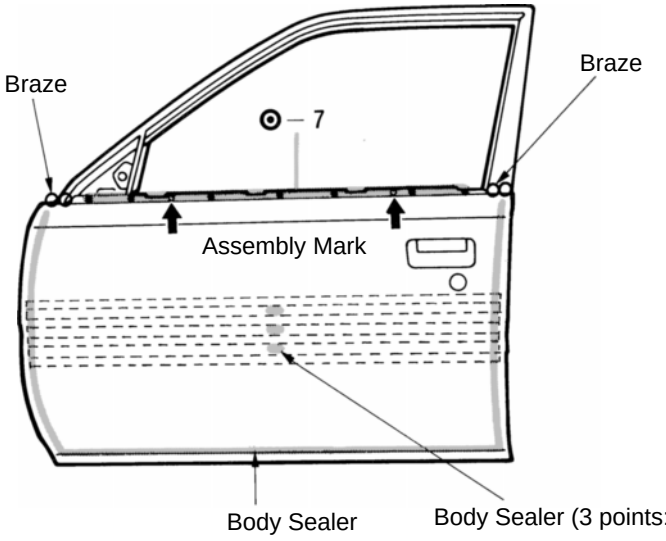

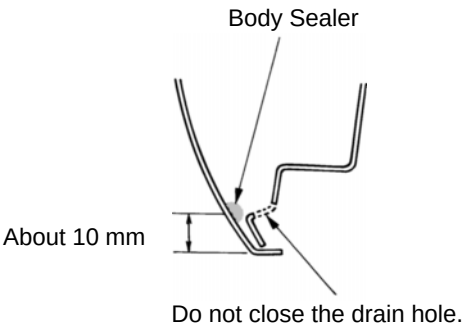

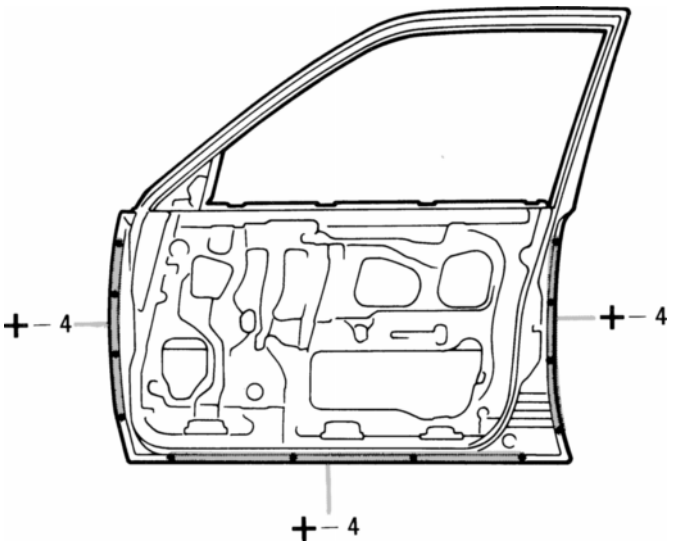

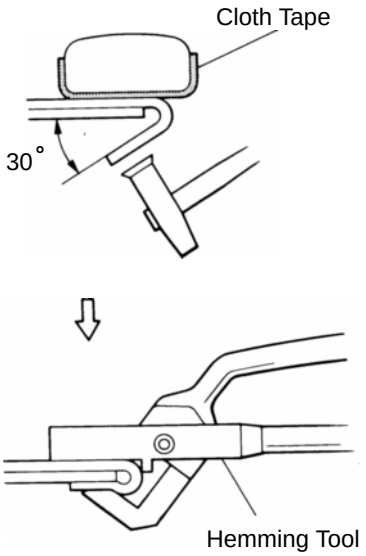

mm	in.
10	0.39

1. Before temporarily install the new part, coat the back side with body sealer.

NOTE:

1) Coat evenly about 10 mm (0.39 in.) from the flange and 3 mm (0.12 in.) in diameter.

2) For other sealing points, refer to section AR.

2. Bend the flange hem about 30° with a hammer and dolly. Then fasten tightly with a hemming tool.

NOTE:

1) Perform hemming in three steps, being careful not to warp the panel.

2) If hemming tool cannot be used, hem with a hammer and dolly.

REAR DOOR OUTER PANEL (ASSY)

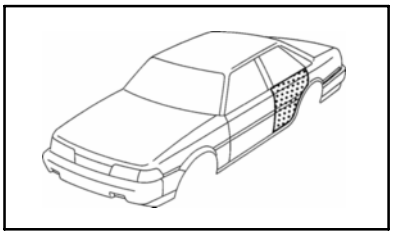

REMOVAL

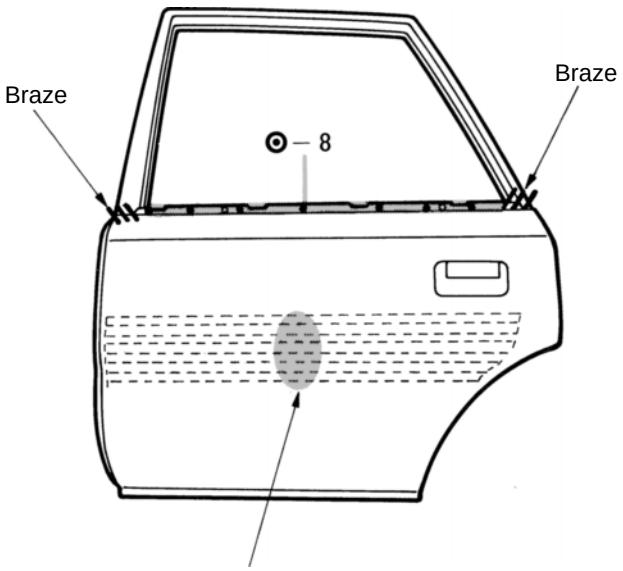

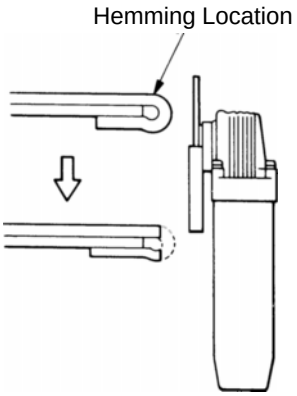

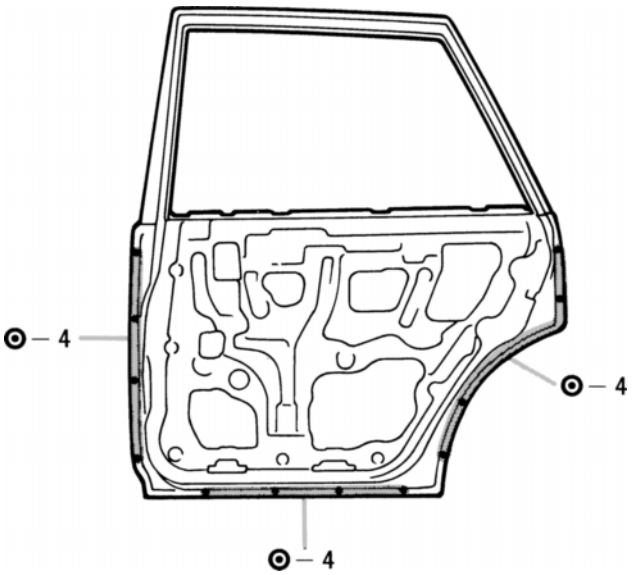

1. Grind out the hemming location, and remove the outer panel.

NOTE: Slightly heating the outer panel will soften the sealer and make removal easier.
(w/ front door side impact protection beam)

INSTALLATION

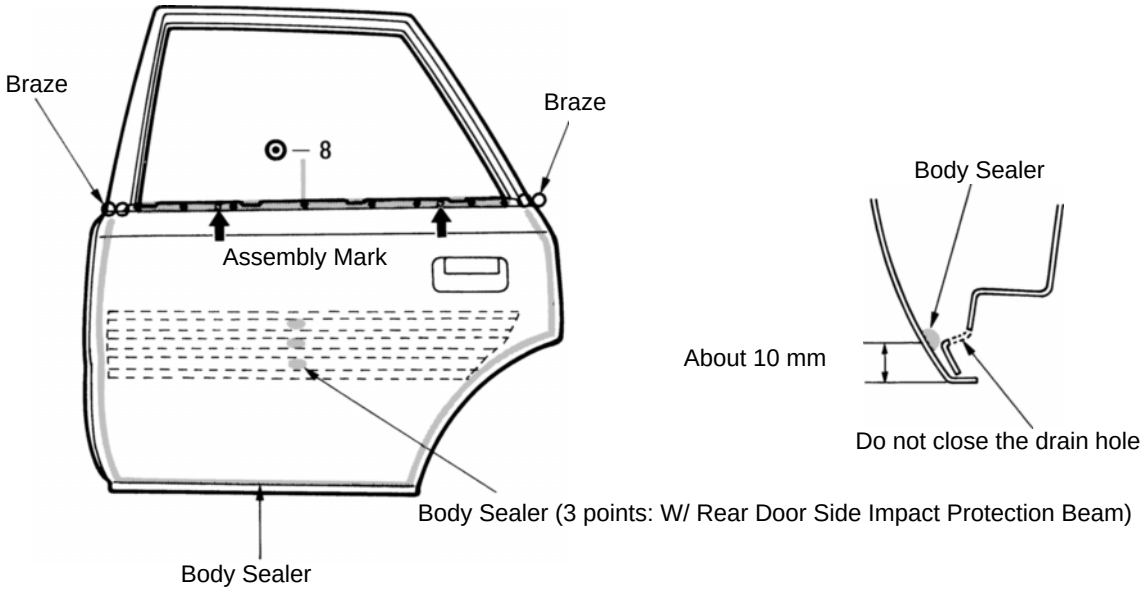

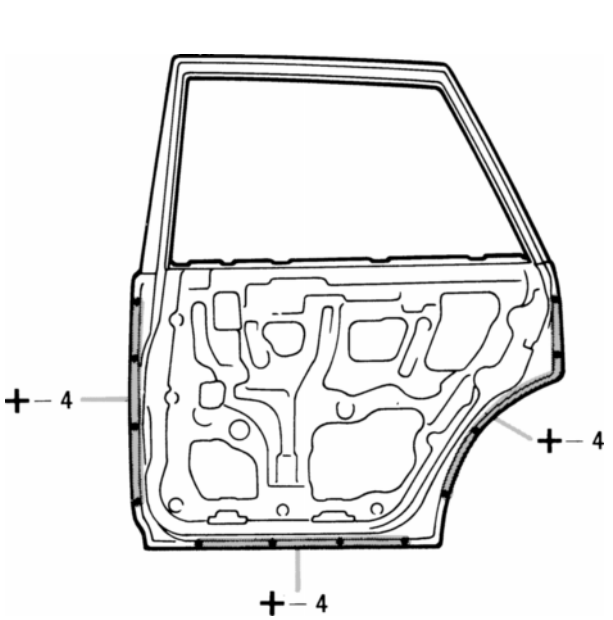

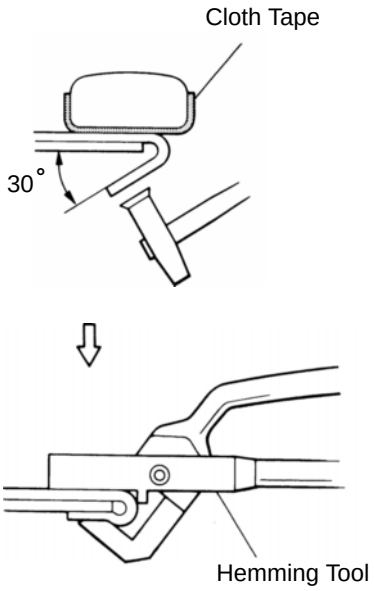

mm	in.
10	0.39

1. Before temporarily installing the new part, coat the back side with body sealer.

NOTE:

1) Coat evenly about 10 mm (0.39 in.) from the flange and 3 mm (0.12 in.) in diameter.

2) For other sealing points, refer to section AR.

2. Bend the flange hem about 30° with a hammer and dolly. Then fasten tightly with a hemming tool.

NOTE:

1) Performing hemming in three steps, being careful not to warp the panel.

2) If hemming tool cannot be used, hem with a hammer and dolly.

QUARTER PANEL (CUT): SEDAN

Sedan

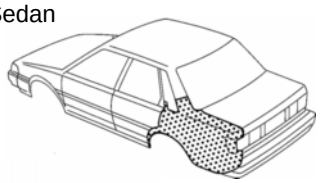

REMOVAL

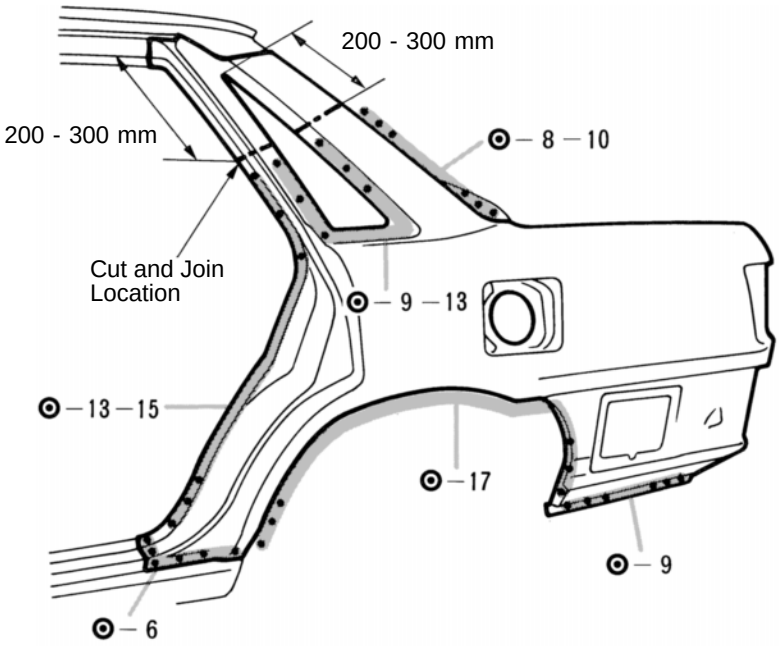

[Cut and Join Location]

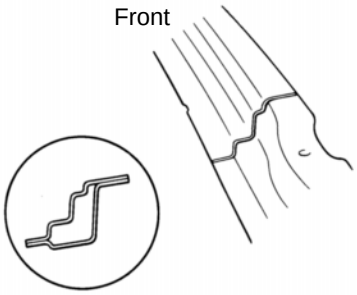

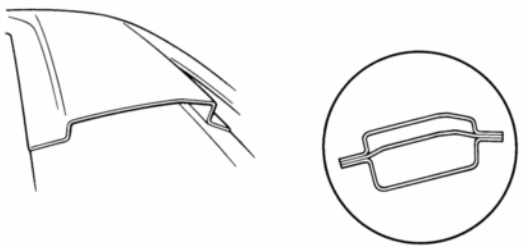

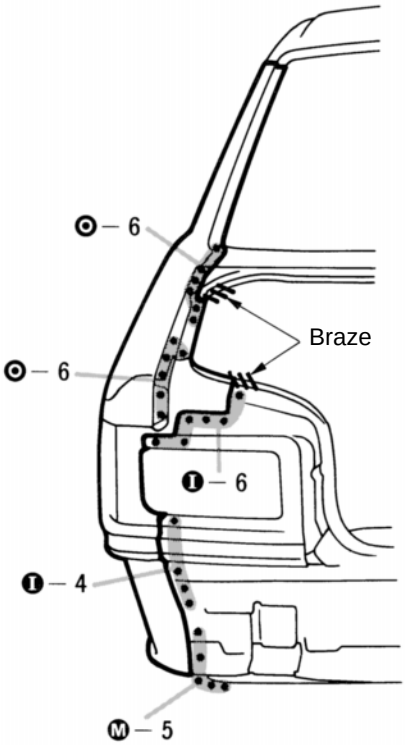

mm	in.
200	7.87
300	11.81

1. Cut and join the part at area as shown above.

NOTE: Before cutting, remove the drain hole of the moonroof.

INSTALLATION

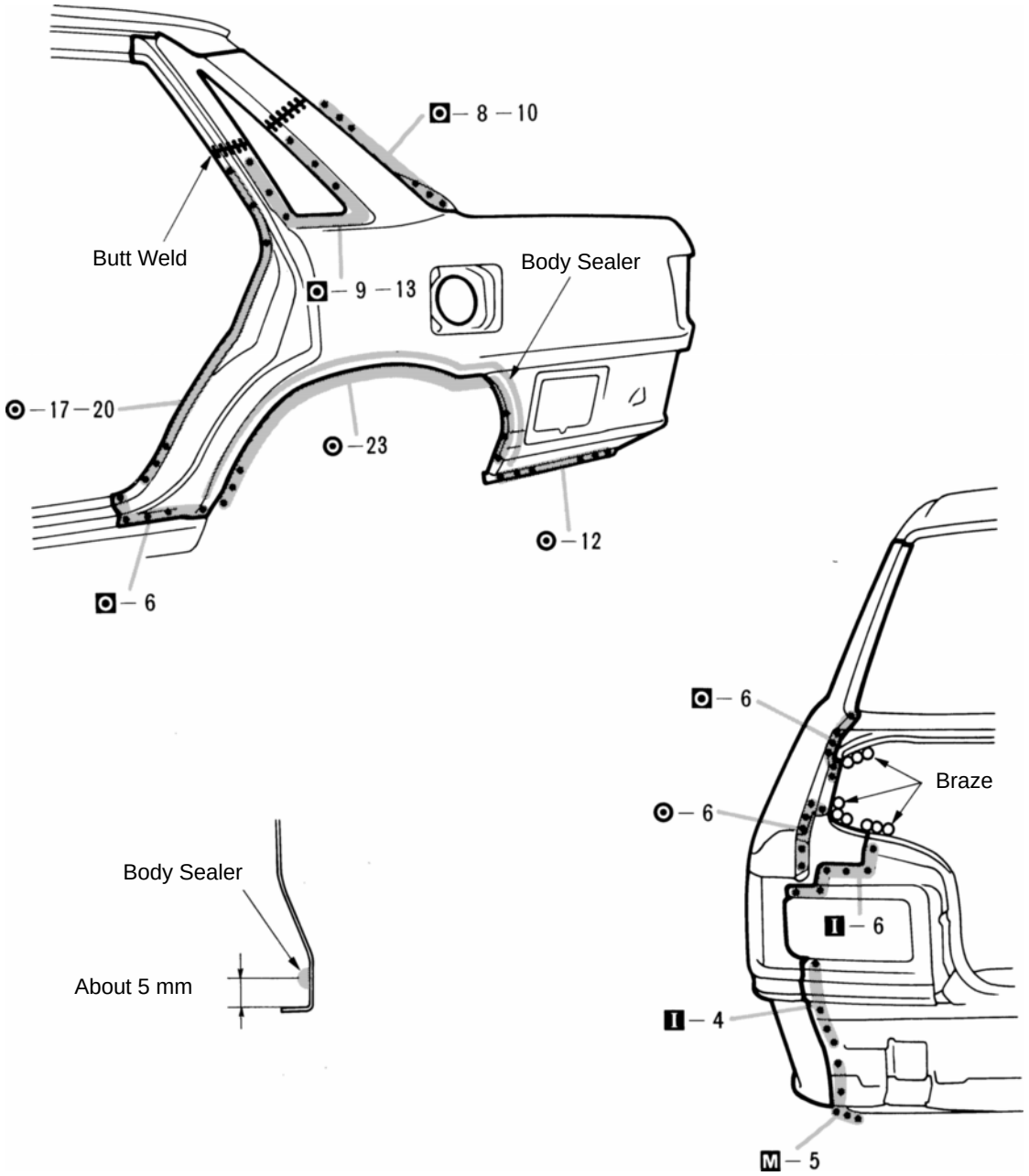

mm	in.
5	0.20

1. Before temporarily installing the new part, apply body sealer to the wheel arch.

NOTE:

1) Apply sealer about 5 mm (0.20 in.) from the flange, avoiding any oozing.

2) Apply evenly, about 3 - 4 mm (0.12 - 0.16 in.) in diameter.

3) For other sealing points, refer to AR.

2. Temporarily install the new part and check fit for the rear door, luggage compartment door and rear combination light.

QUARTER PANEL (CUT): Wagon

Wagon

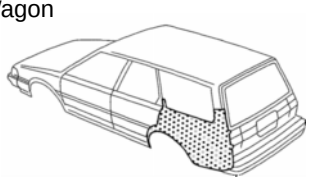

REMOVAL

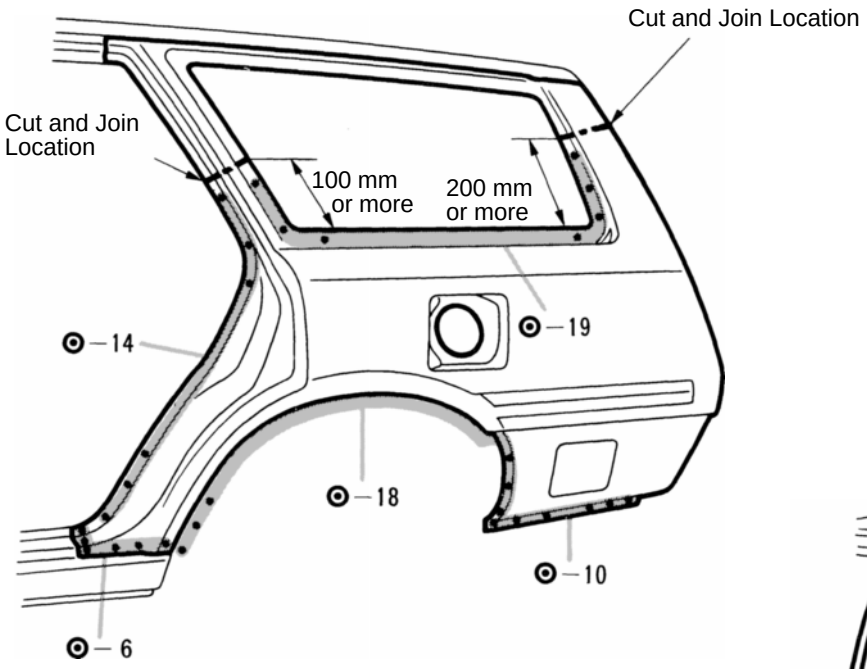

[Cut and Join Location]

Front

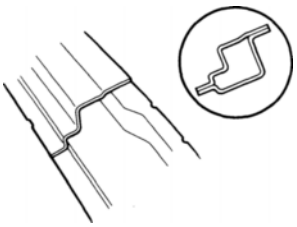

Rear

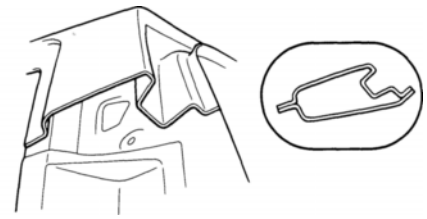

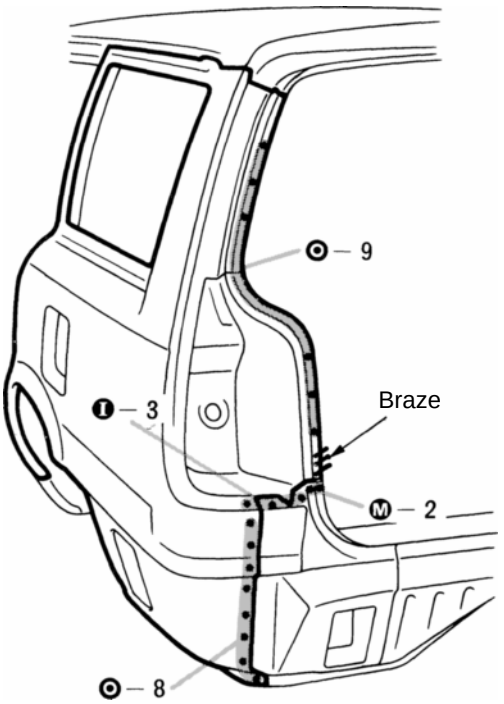

mm	in.
100	3.94
200	7.87

1. Cut and join the part at area as shown above.

NOTE: Before cutting, remove the drain hole of the moonroof.

INSTALLATION

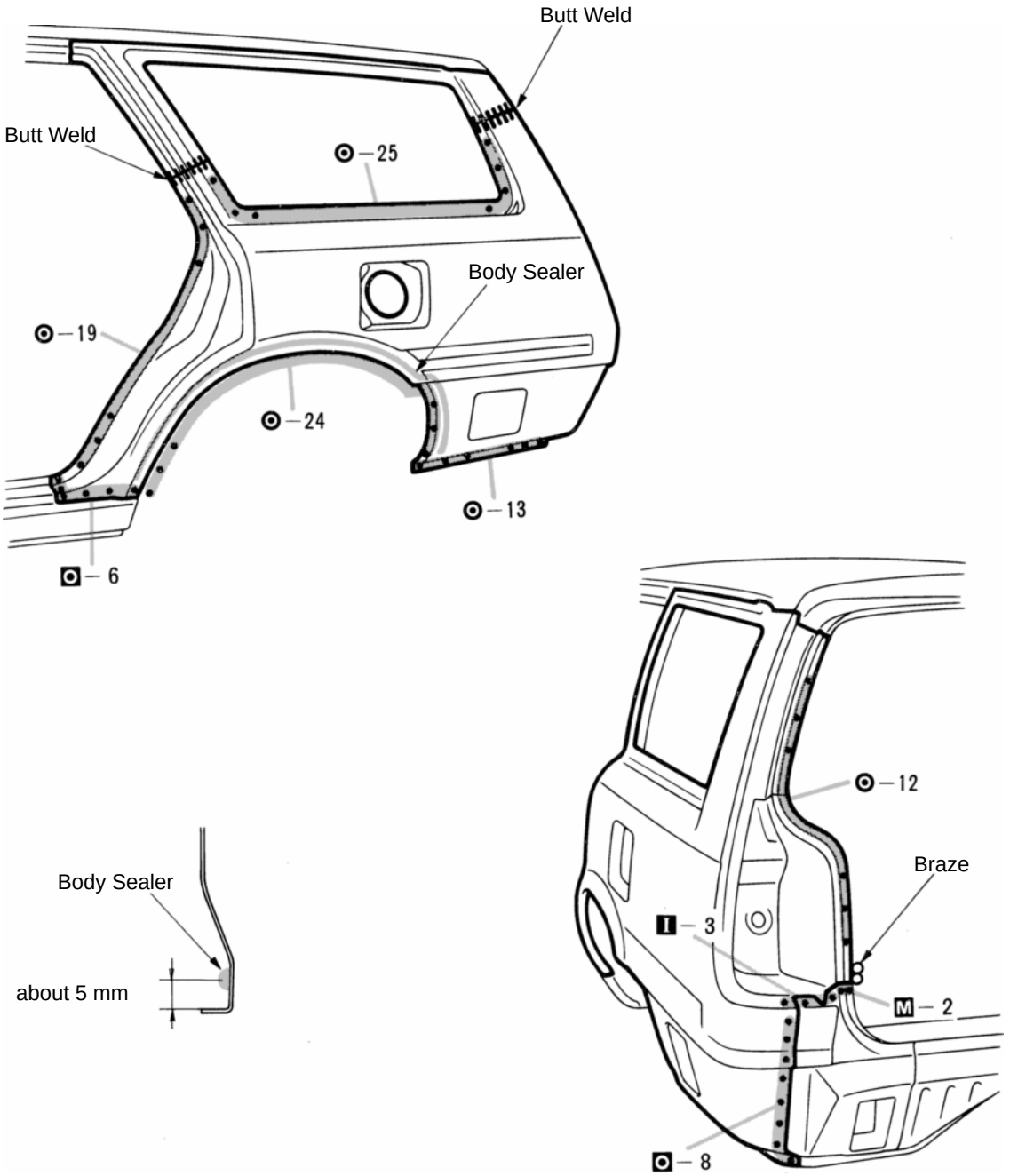

1. Before temporarily installing the new part, apply body sealer to the wheel arch.

NOTE:

1) Apply sealer about 5 mm (0.20 in.) from the flange, avoiding any oozing.

2) Apply evenly, about 3 - 4 mm (0.12 - 0.16 in.) in diameter.

3) For other sealing points, refer to section AR.

2. Temporarily install the new part and check the fit for the rear door, back door and rear combination light.

QUARTER PANEL (CUT-P): Sedan

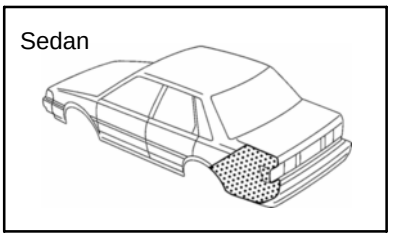

REMOVAL

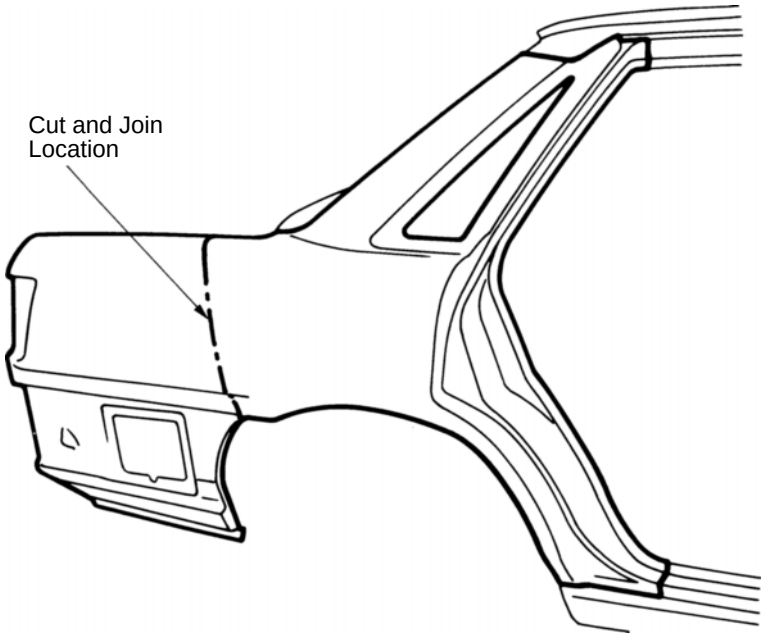

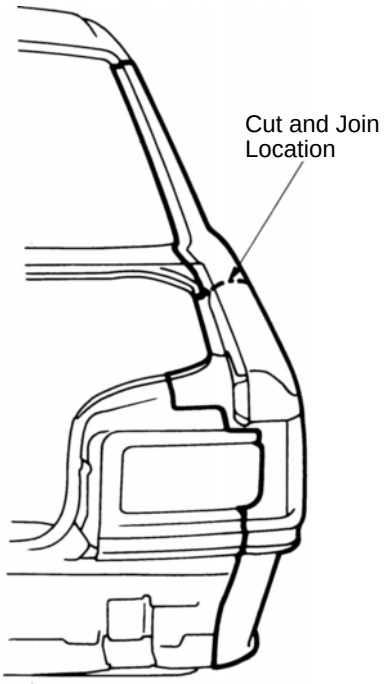

* This section is a cut and join location only.
Refer to RE-34 for weld points.

1. Cut on the line shown above.

INSTALLATION

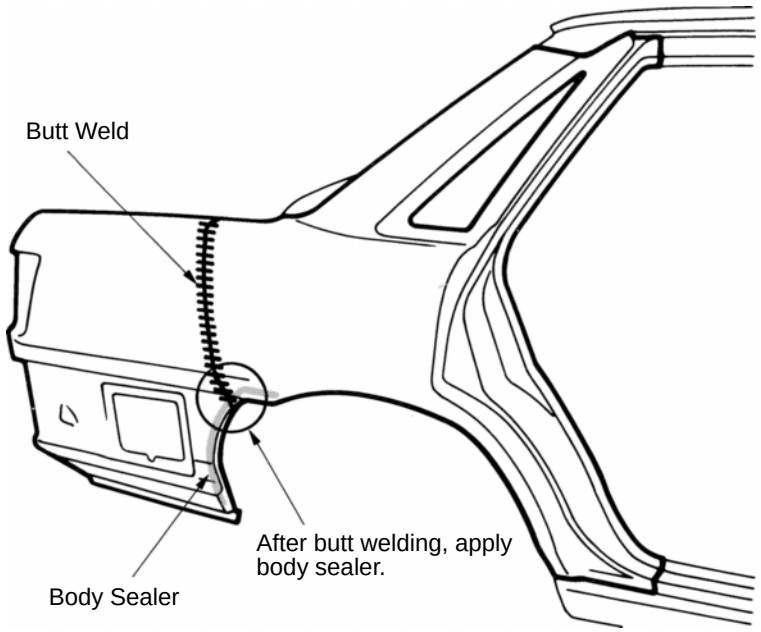

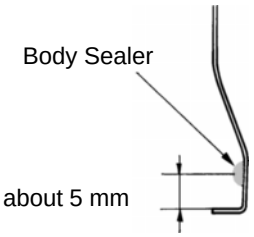

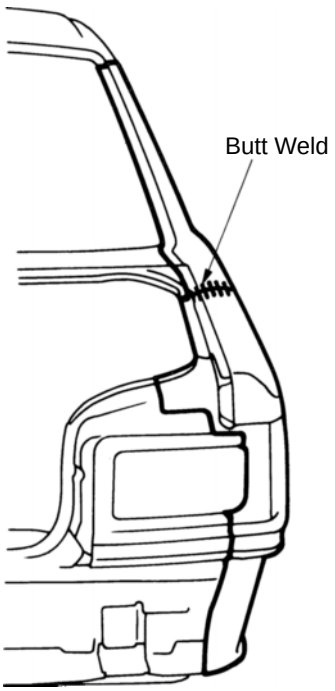

* This section is a cut and join location only. Refer to RE-35 for weld points.

mm	in.
5	0.20

1. Before cutting the overlap areas, check the fit for the luggage compartment door and rear combination light.
2. Before welding, apply body sealer from inside of the vehicle.

NOTE:

1) Do not apply body sealer to the weld seams before welding as the sealer will melt, resulting in a bad seal and a bad weld.

2) For other sealing points, refer to section AR.

3. Surface finish the weld seam from the inside also.

NOTE: Be careful not to grind off to much weld as it will result in loss of durability.

QUARTER PANEL (CUT-P): Wagon

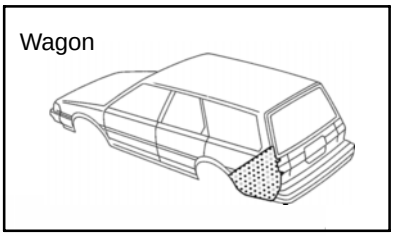

REMOVAL

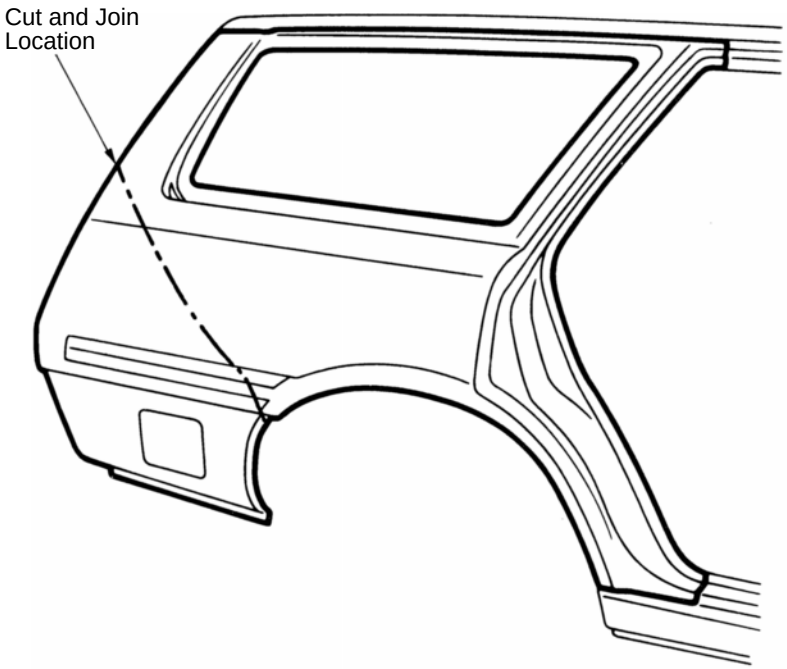

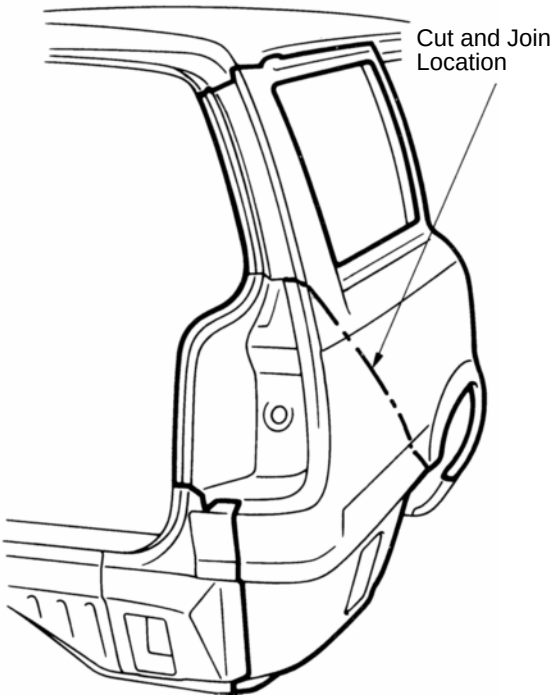

* This section is a cut and join location only.
Refer to RE-36 for weld points.

1. Cut on the line shown above.

INSTALLATION

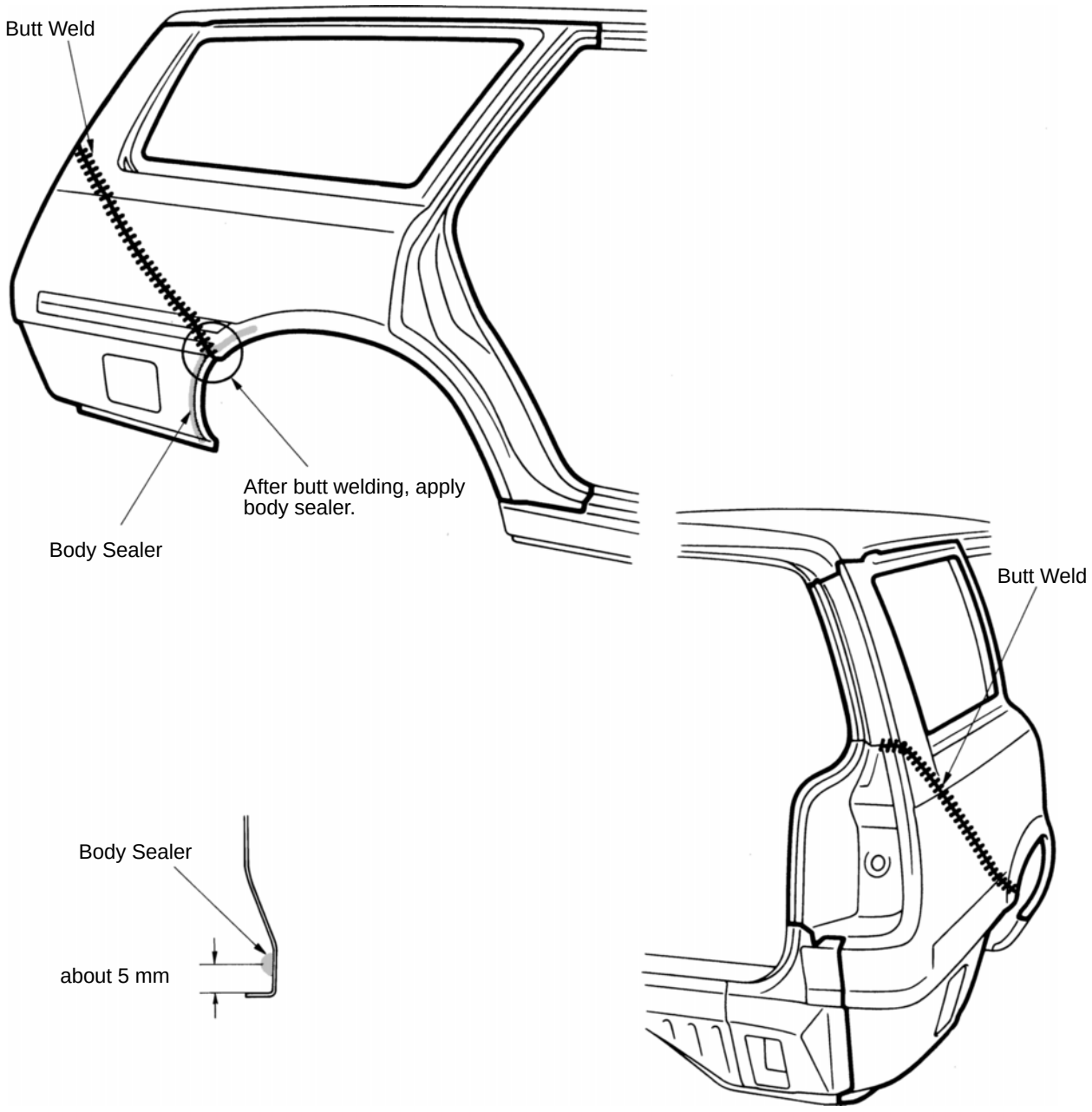

* This section is a cut and join location only. Refer to RE-37 for weld points.

mm	in.
5	0.20

1. Before cutting the overlap areas, check the fit for the luggage compartment door and rear combination light.
2. Before welding, apply body sealer from inside of the vehicle.

NOTE:

1) Do not apply body sealer to the weld seams before welding as the sealer will melt, resulting in a bad seal and a bad weld.

2) For other sealing points, refer to section AR.

3. Surface finish the weld seam from the inside also.

NOTE: Be careful not to grind off to much weld as it will result in loss of durability.

BODY LOWER BACK PANEL (ASSY): SEDAN

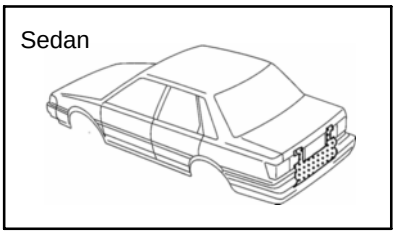

REMOVAL

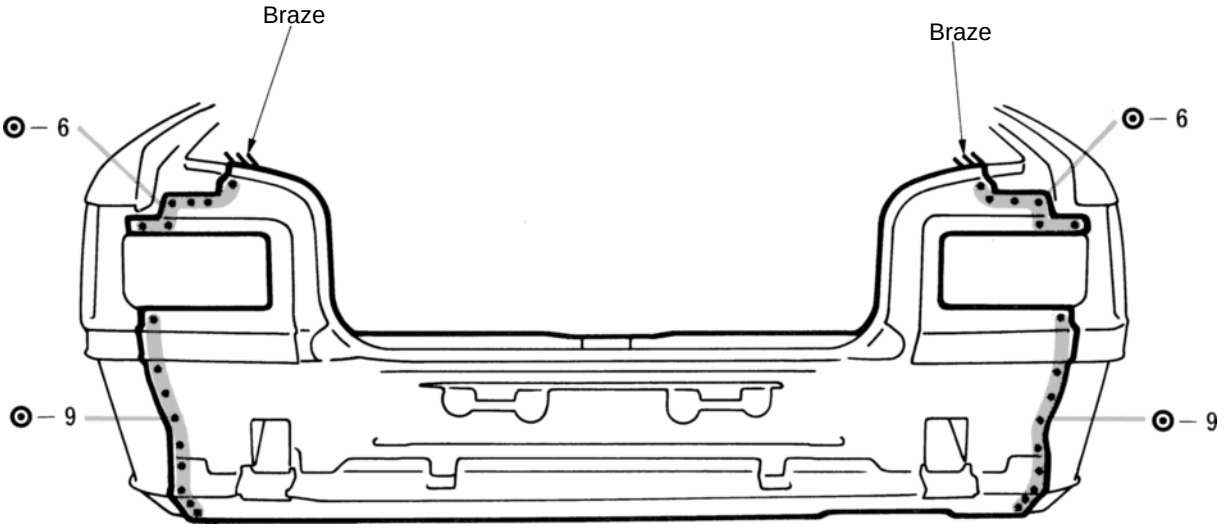

INSTALLATION

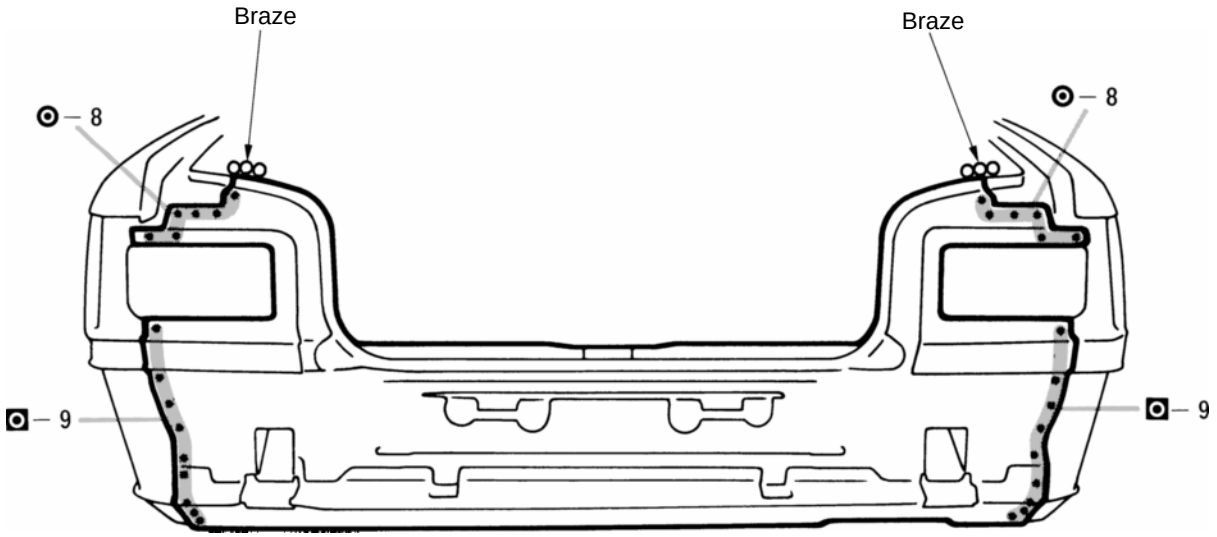

1. Temporarily install the new part and check fit for the rear combination light and luggage compartment door.

BODY LOWER OUTER BACK PANEL (ASSY): WAGON

Wagon

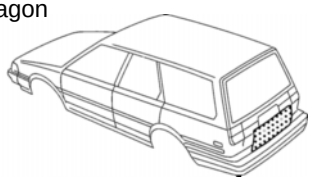

REMOVAL

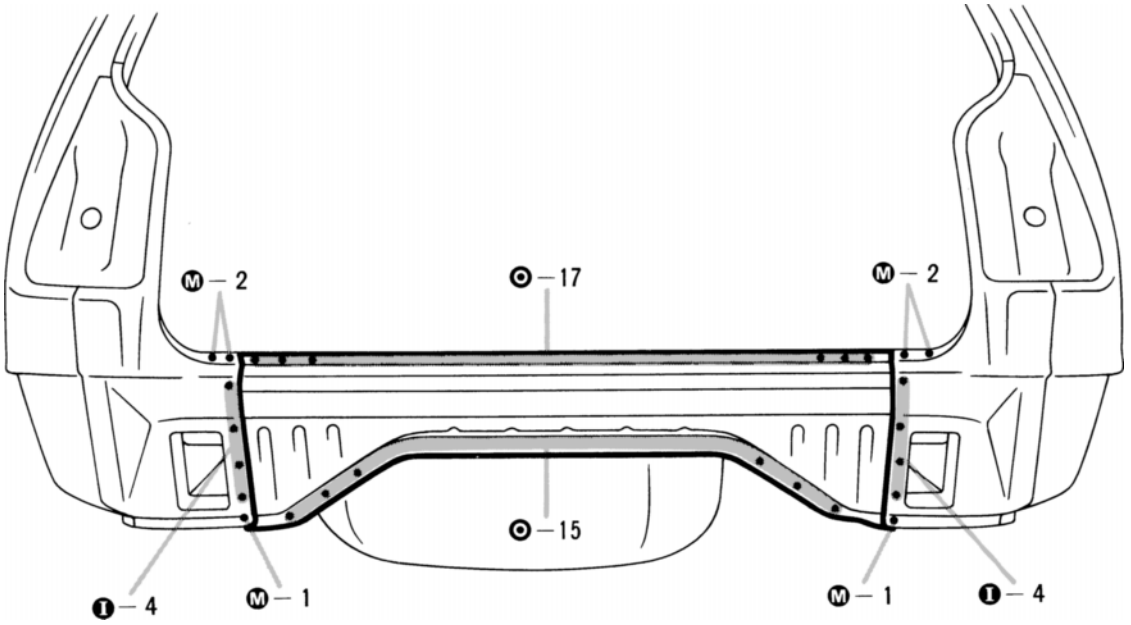

INSTALLATION

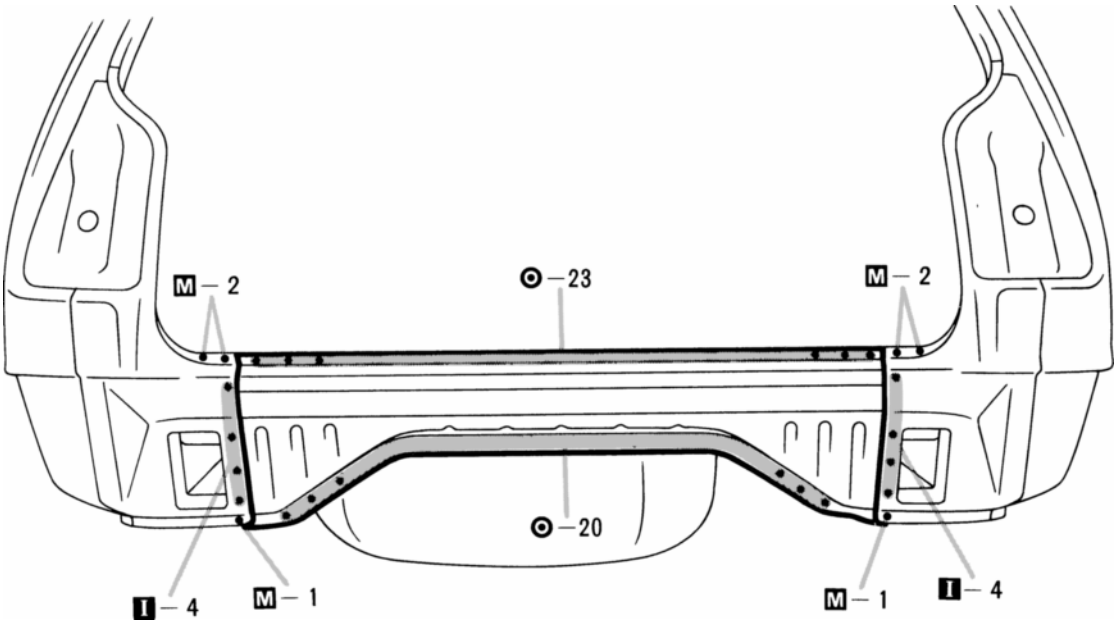

1. Temporarily install the new part and check fit for the back door.

BACK DOOR FRONT OPENING TROUGH (ASSY): WAGON

Wagon

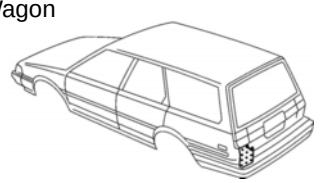

REMOVAL

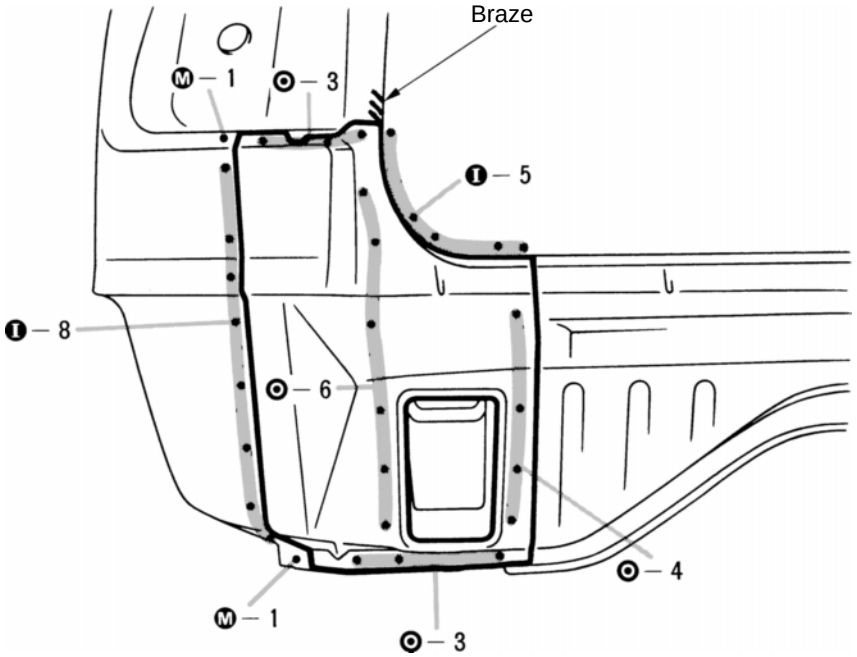

INSTALLATION

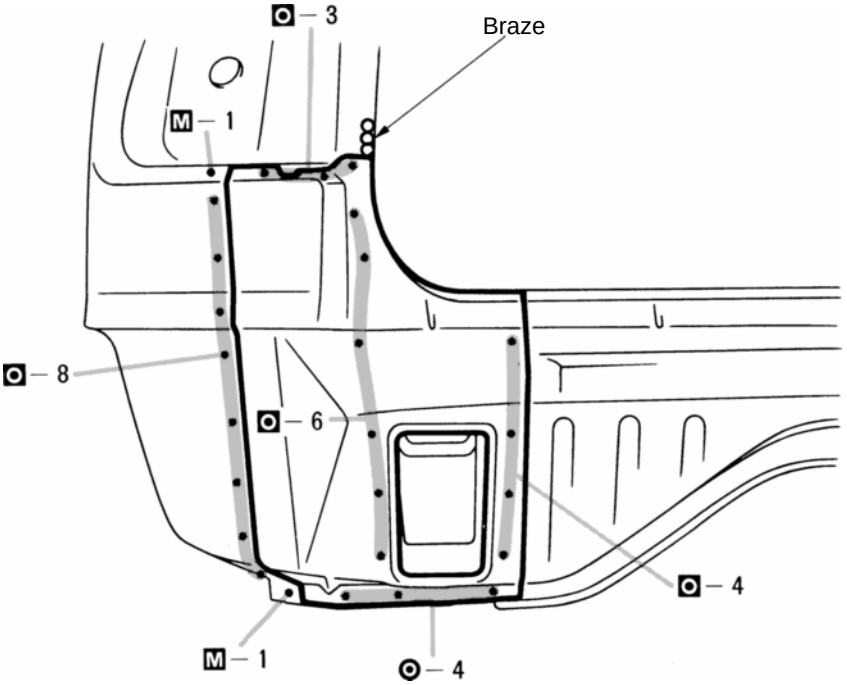

1. Temporarily install the new part and check fit for the back door and rear combination light.

ROOF SIDE OUTER PANEL (ASSY): WAGON

Wagon

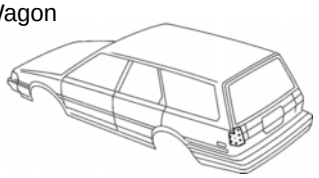

REMOVAL (**With the quarter panel and back door front opening trough removed.**)

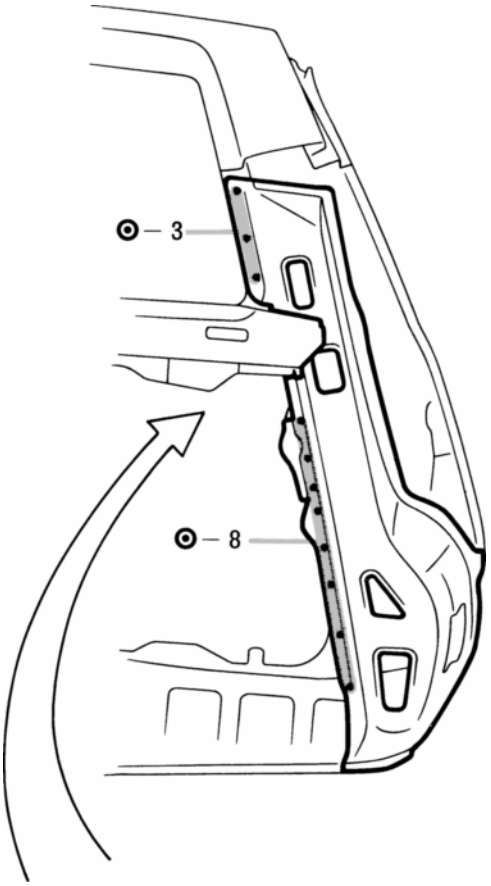

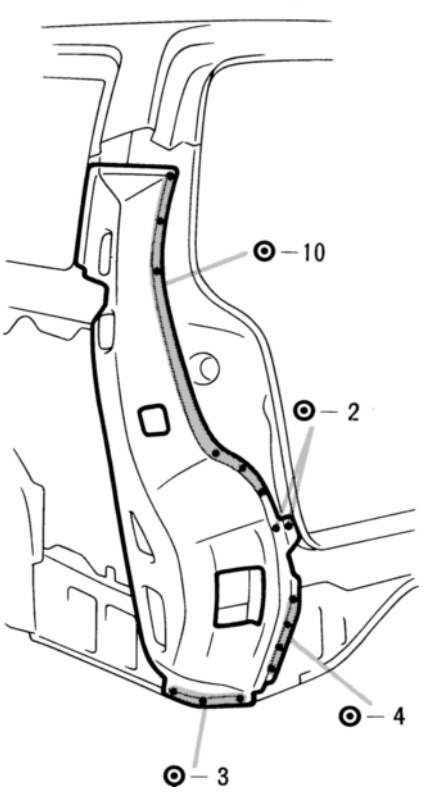

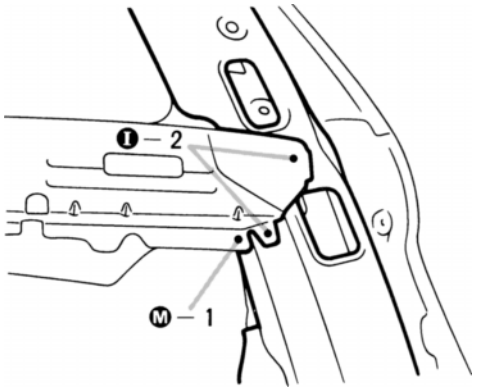

INSTALLATION

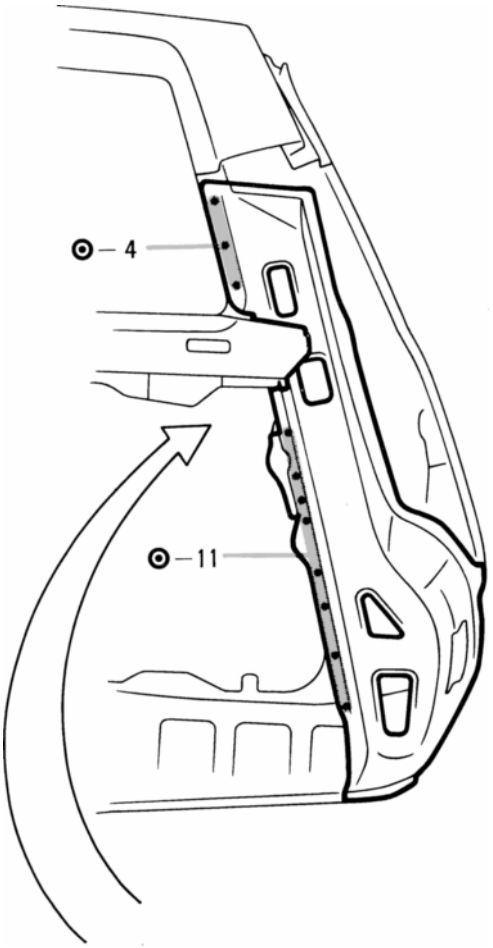

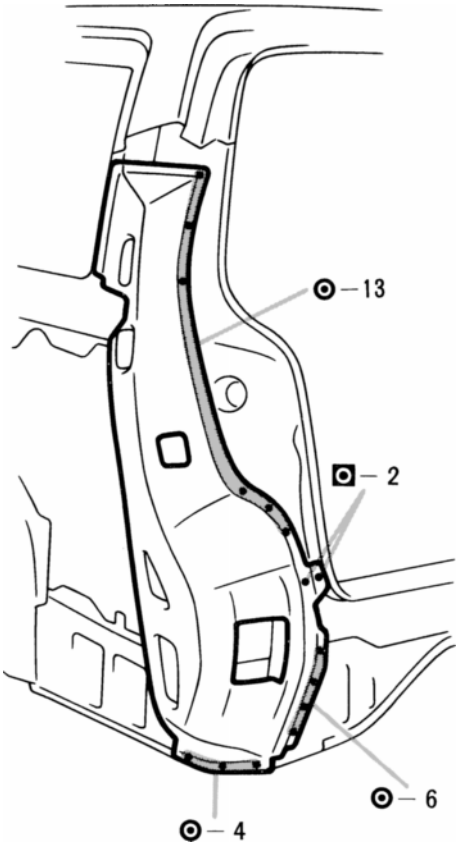

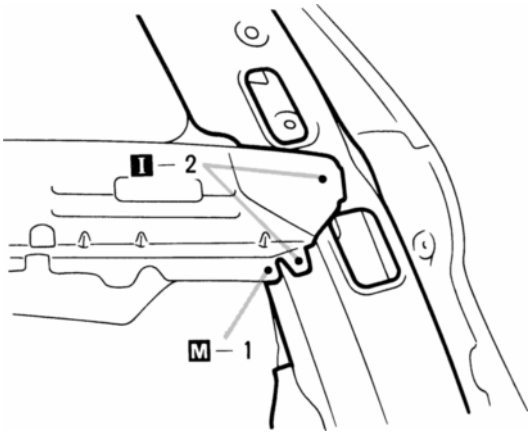

1. Before welding, temporarily install the quarter panel and back door front opening trough and check the fit.

QUARTER WHEEL HOUSING OUTER PANEL (ASSY): SEDAN

Sedan

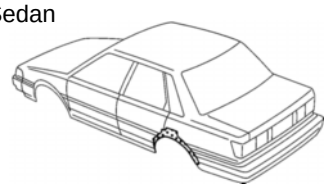

REMOVAL (With the quarter panel removed)

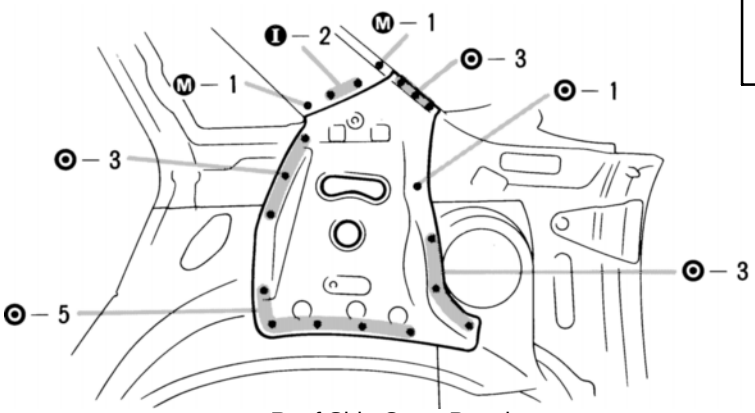

Roof Side Outer Panel

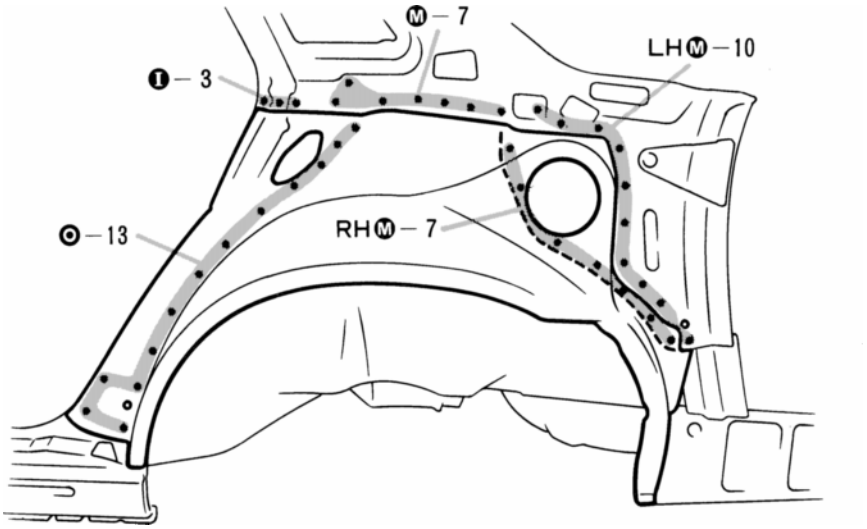

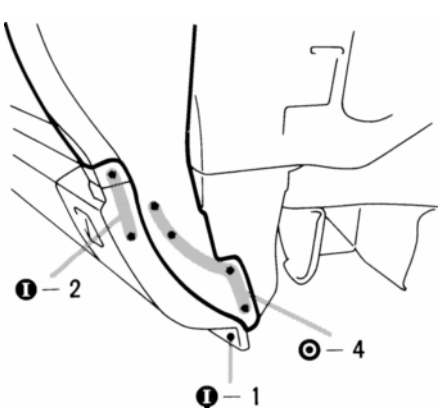

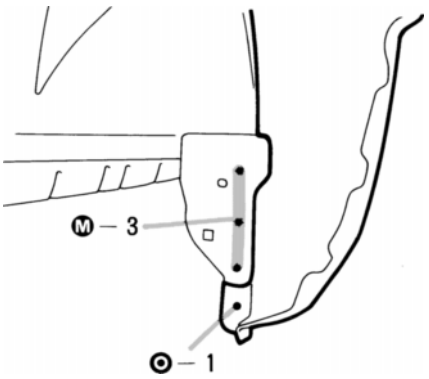

1. After removing the roof side outer panel, remove the quarter wheel housing outer panel.

INSTALLATION

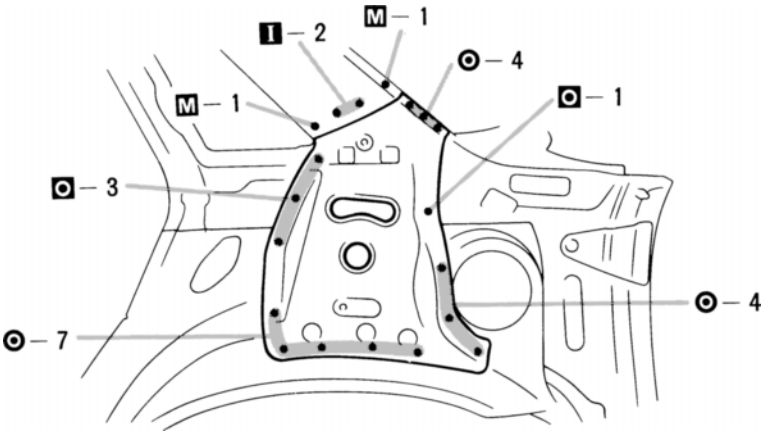

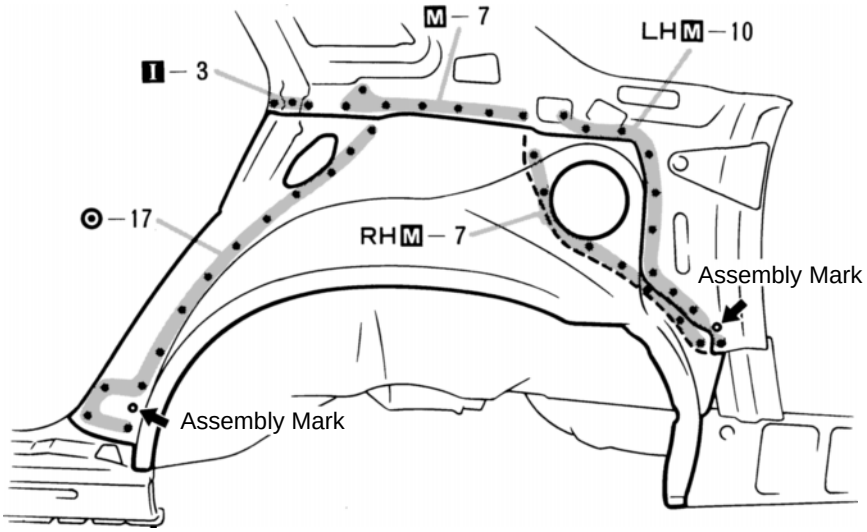

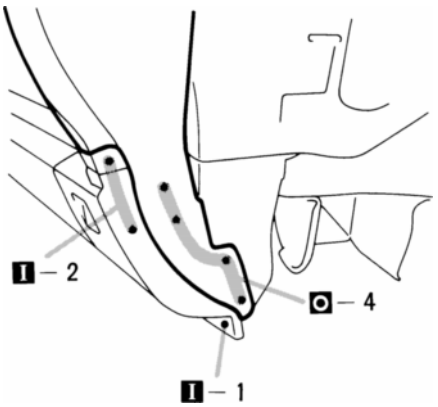

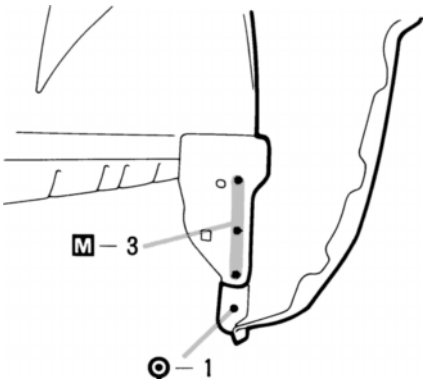

1. Determine the position of the new part by the assembly marks of the inner and outer panels.
2. Before welding the new part, temporarily install the quarter panel and check the fit.

QUARTER WHEEL HOUSING OUTER PANEL (ASSY): WAGON

Wagon

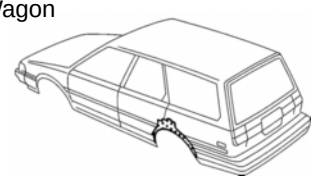

REMOVAL (With the quarter panel removed.)

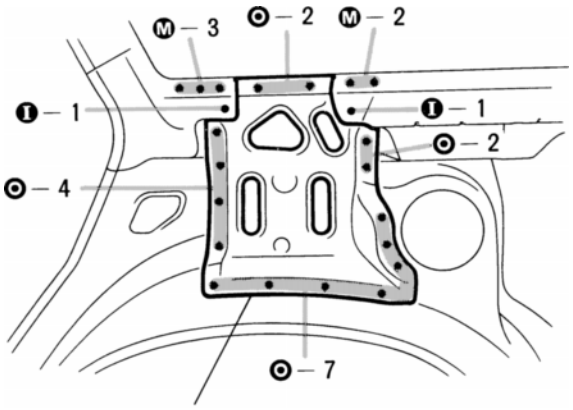

Roof Side Inner to Wheel Housing Brace

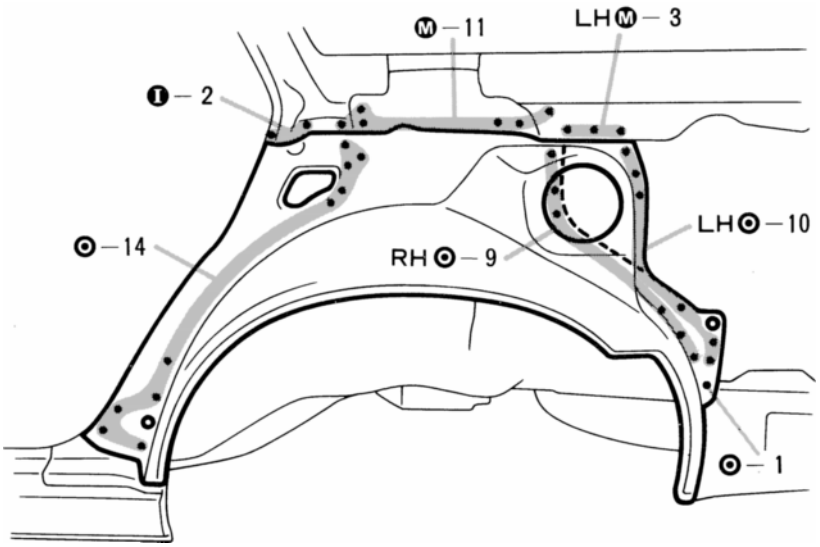

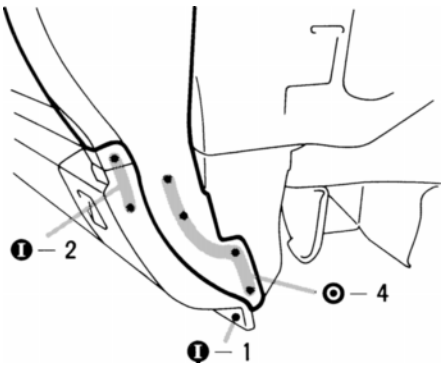

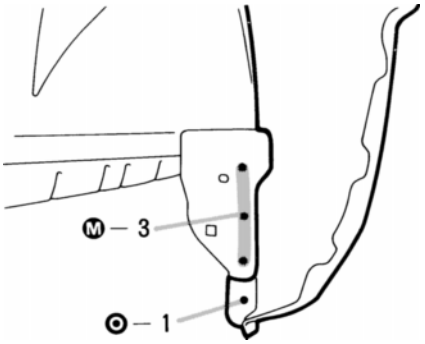

1. After removing the roof side inner to wheel housing brace, remove the quarter wheel housing outer panel.

INSTALLATION

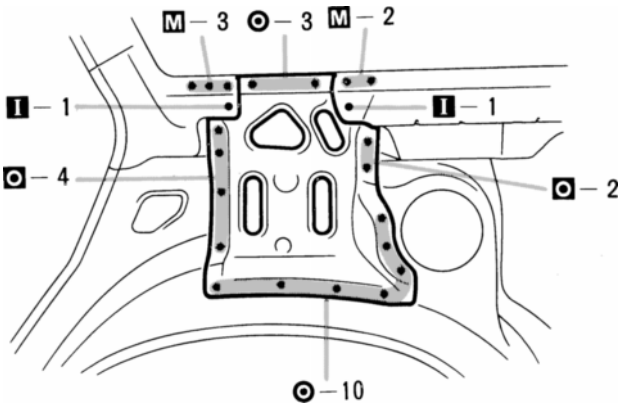

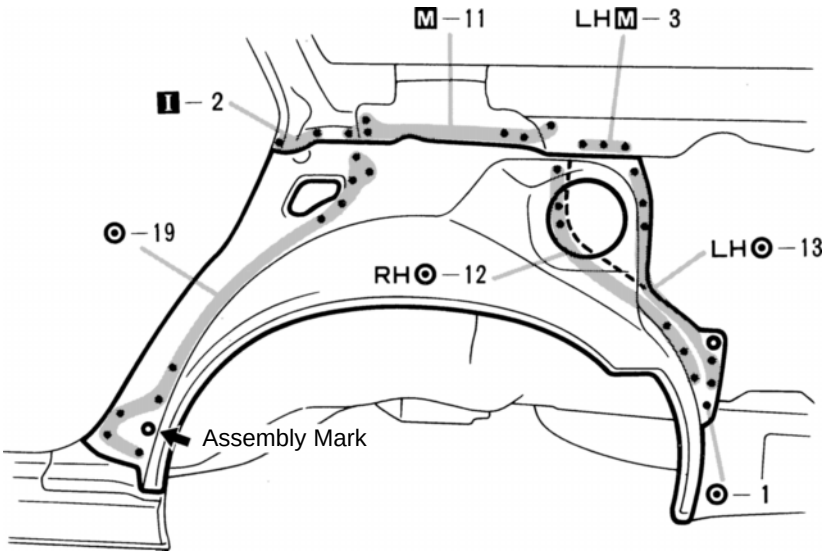

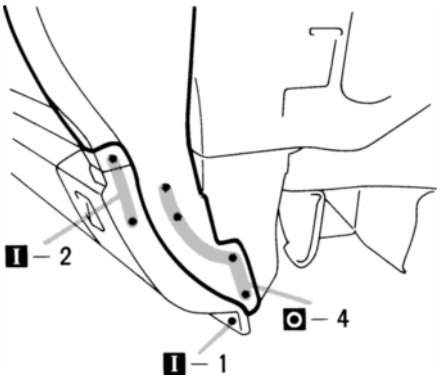

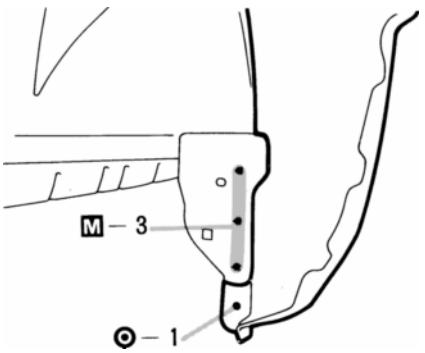

1. Determine the position of the new part by the assembly marks of the inner and outer panels.
2. Before welding the new part, temporarily install the quarter panel and check the fit.

REAR FLOOR REAR INNER CROSSMEMBER (CUT): WAGON

Wagon

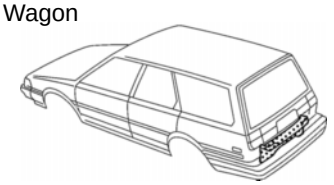

REMOVAL (**With the body lower outer back panel and roof side outer panel removed.**)

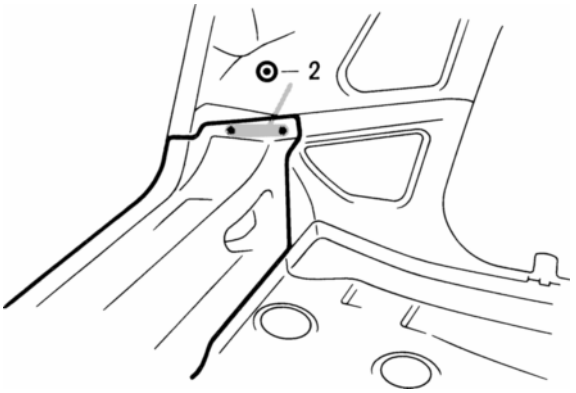

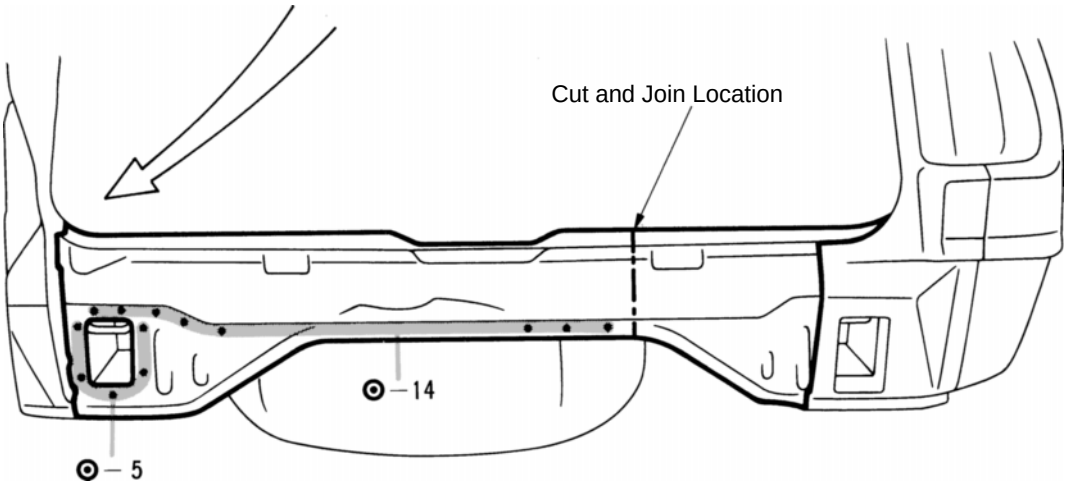

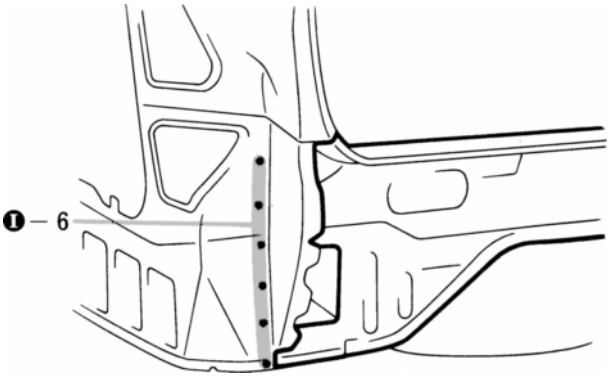

1. Cut and join the part at the location as shown above.

INSTALLATION

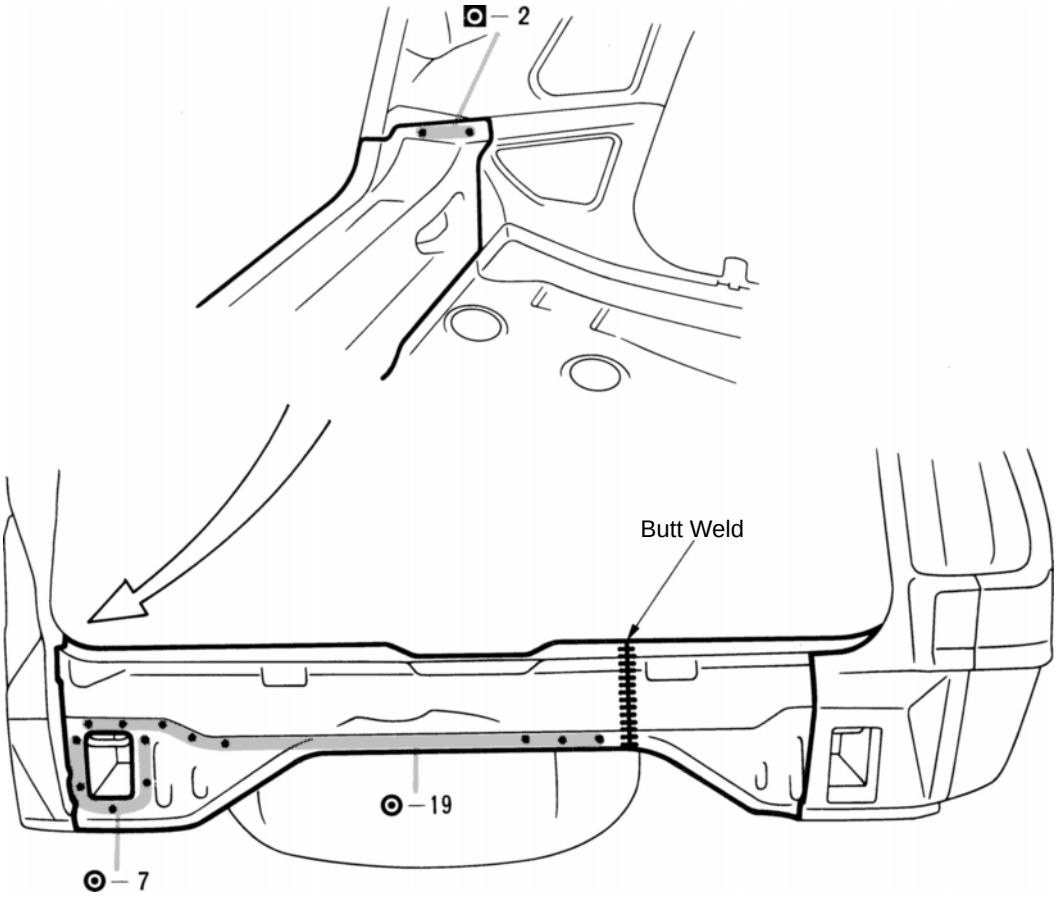

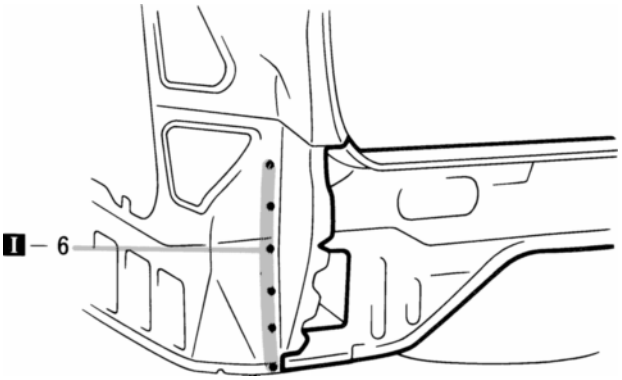

REAR FLOOR PAN (CUT): SEDAN

Sedan

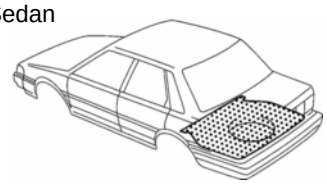

REMOVAL (With the body lower back panel removed.)

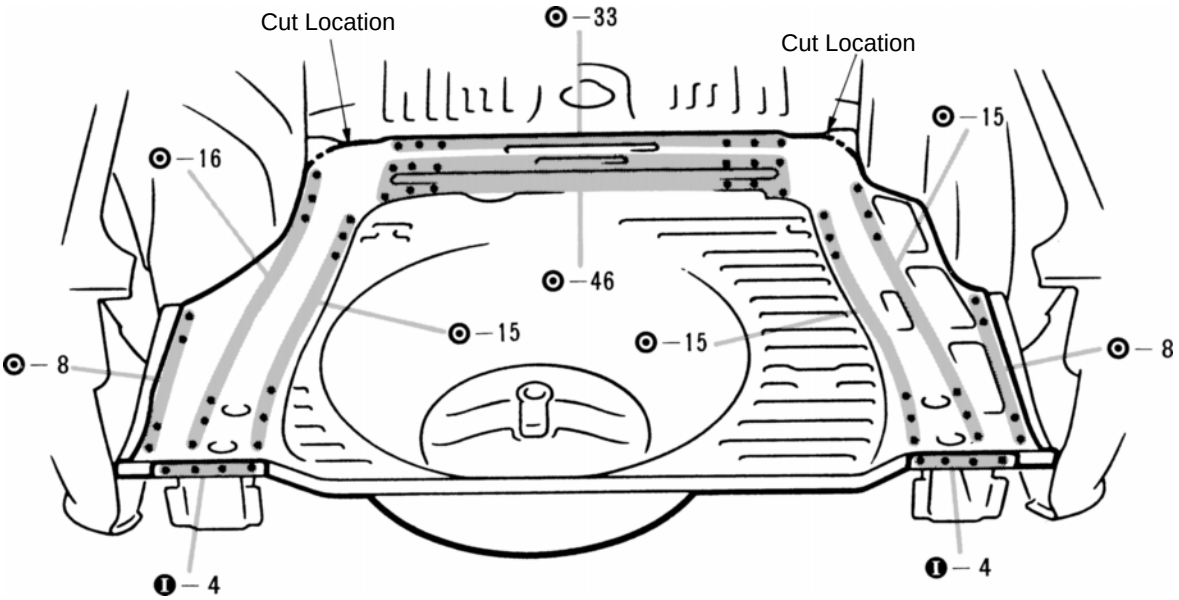

[LH] [RH]

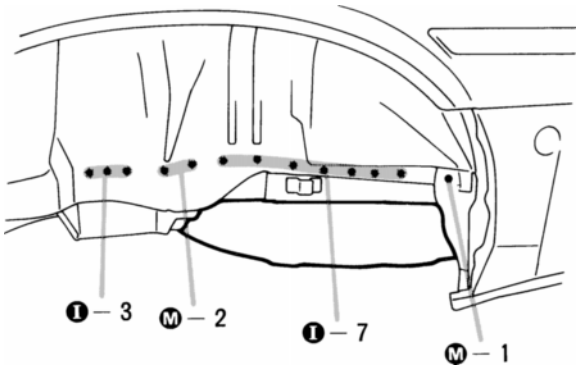

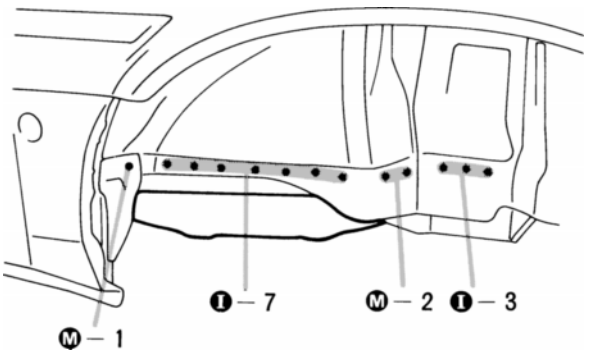

1. Cut the part at the location as shown above.
2. Avoid the rear floor side member and rear floor crossmember when rough cutting.

INSTALLATION

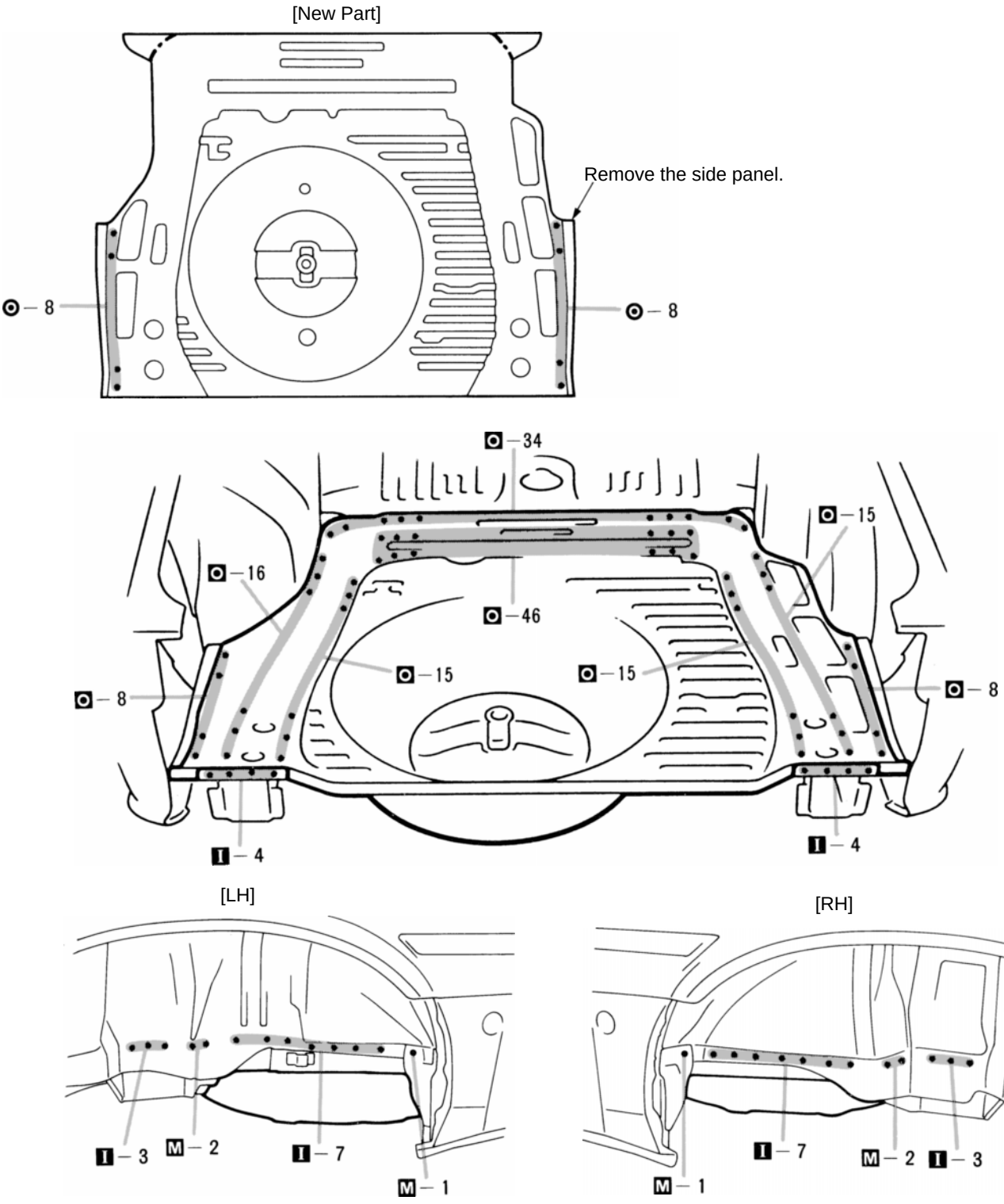

1. Cut the new part at the location as shown above.
2. Temporarily install the new part and measure each part in accordance with the body dimension diagram.
3. Plug weld the overlapping portion of the new part.

NOTE: Be sure the portion to be welded are align and not loose.

REAR FLOOR PAN (CUT): WAGON

Wagon

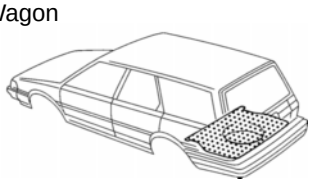

REMOVAL (**With the rear floor rear inner crossmember removed.**)

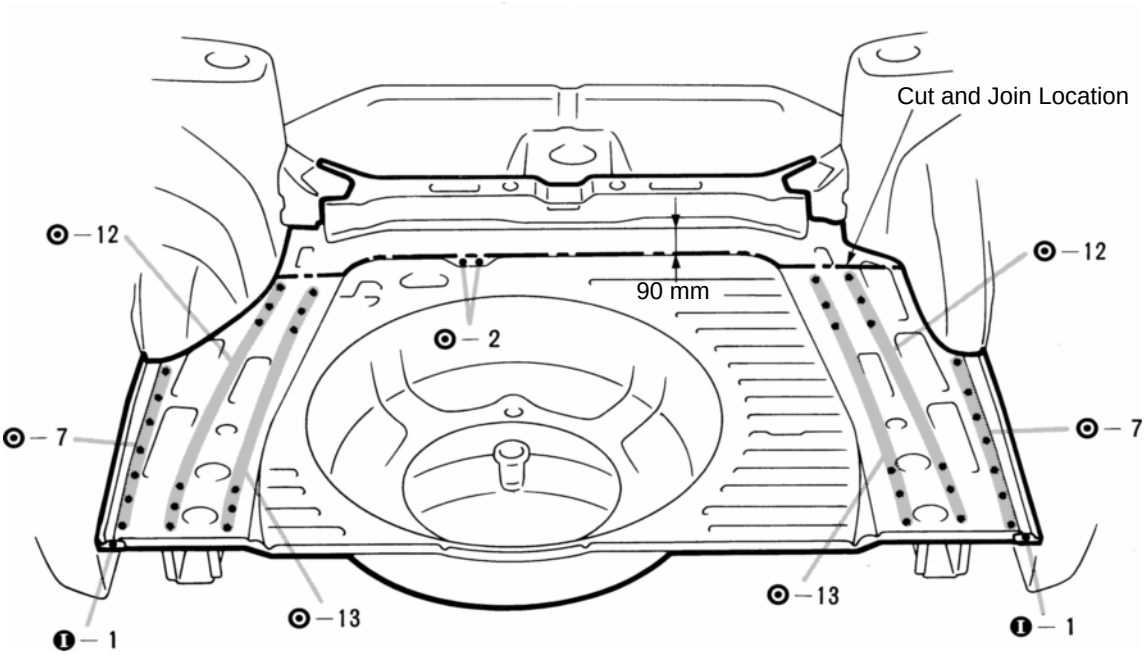

[LH] [RH]

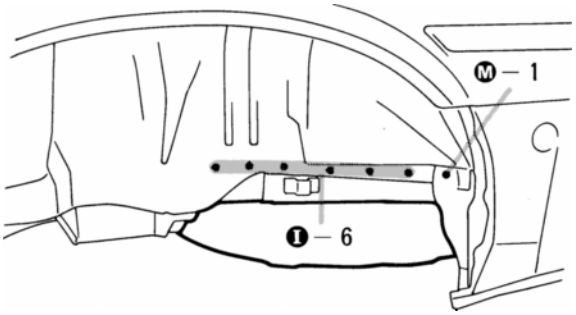

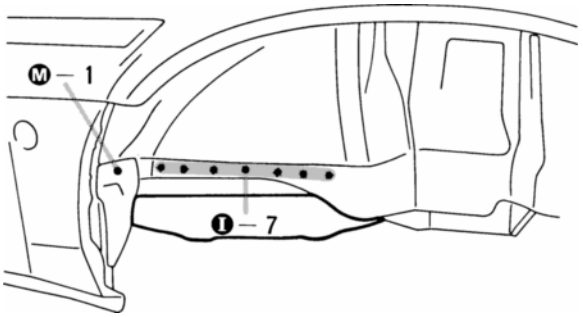

mm	in.
90	3.54

1. Cut the part at the location as shown above.
2. Avoid the rear floor side member when rough cutting.

INSTALLATION

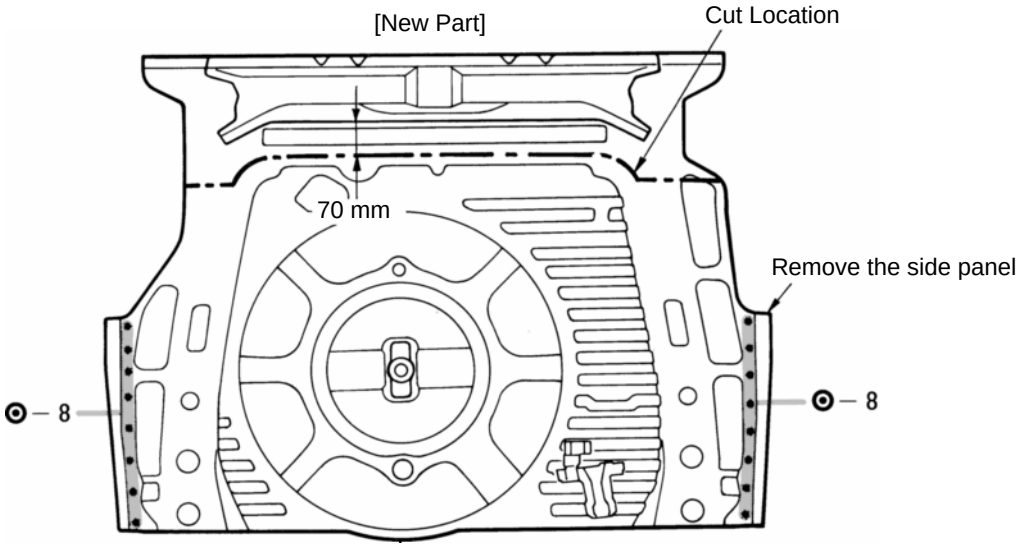

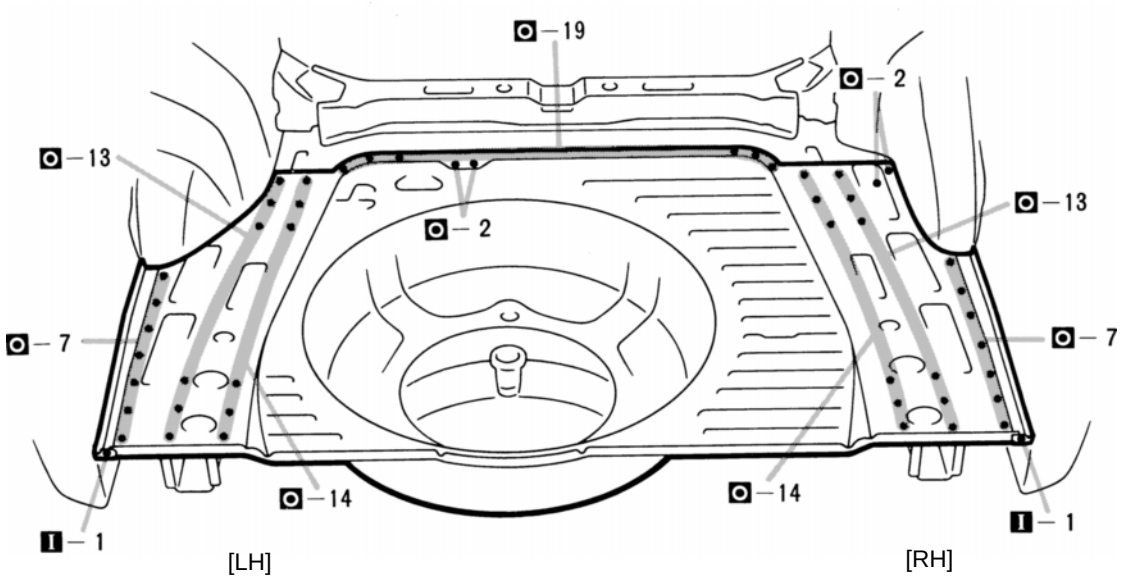

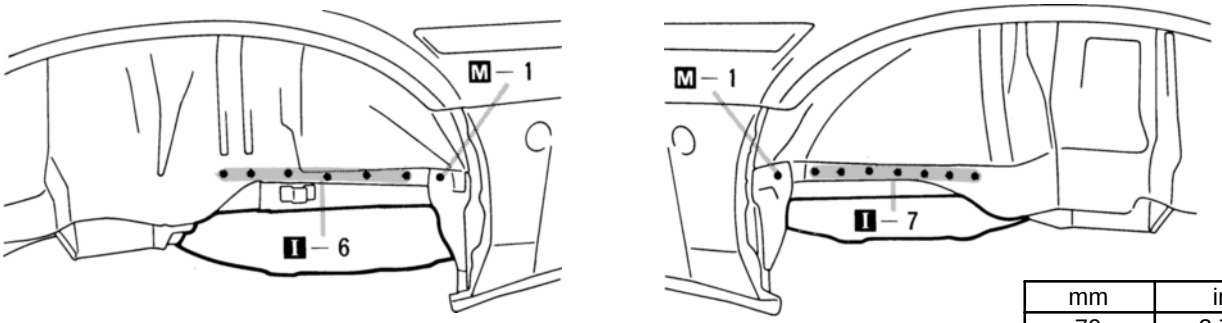

mm	in.
70	2.76

1. Cut the new part at the location as shown above.
2. Temporarily install the new part and measure each part in accordance with the body dimension diagram.
3. Plug weld the overlapping portion of the new part.

NOTE: Be sure the portion to be welded align and not loose.

REAR FLOOR REAR SIDE MEMBER (ASSY)

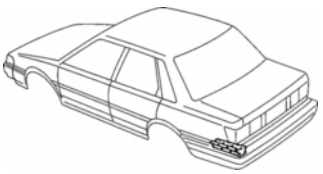

REMOVAL

Sedan: With the body lower back panel removed.
Wagon: With the rear floor rear inner crossmember removed.

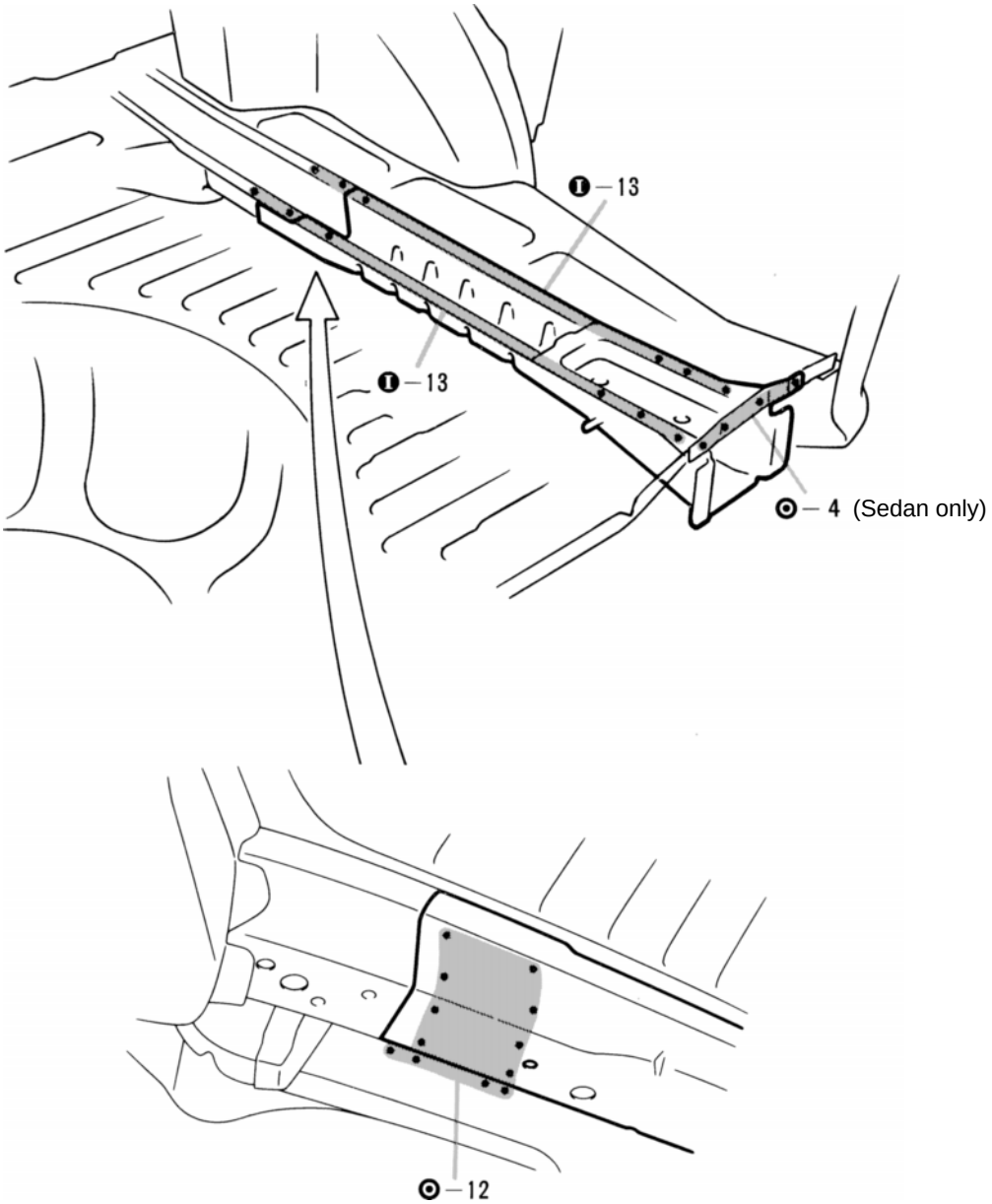

INSTALLATION

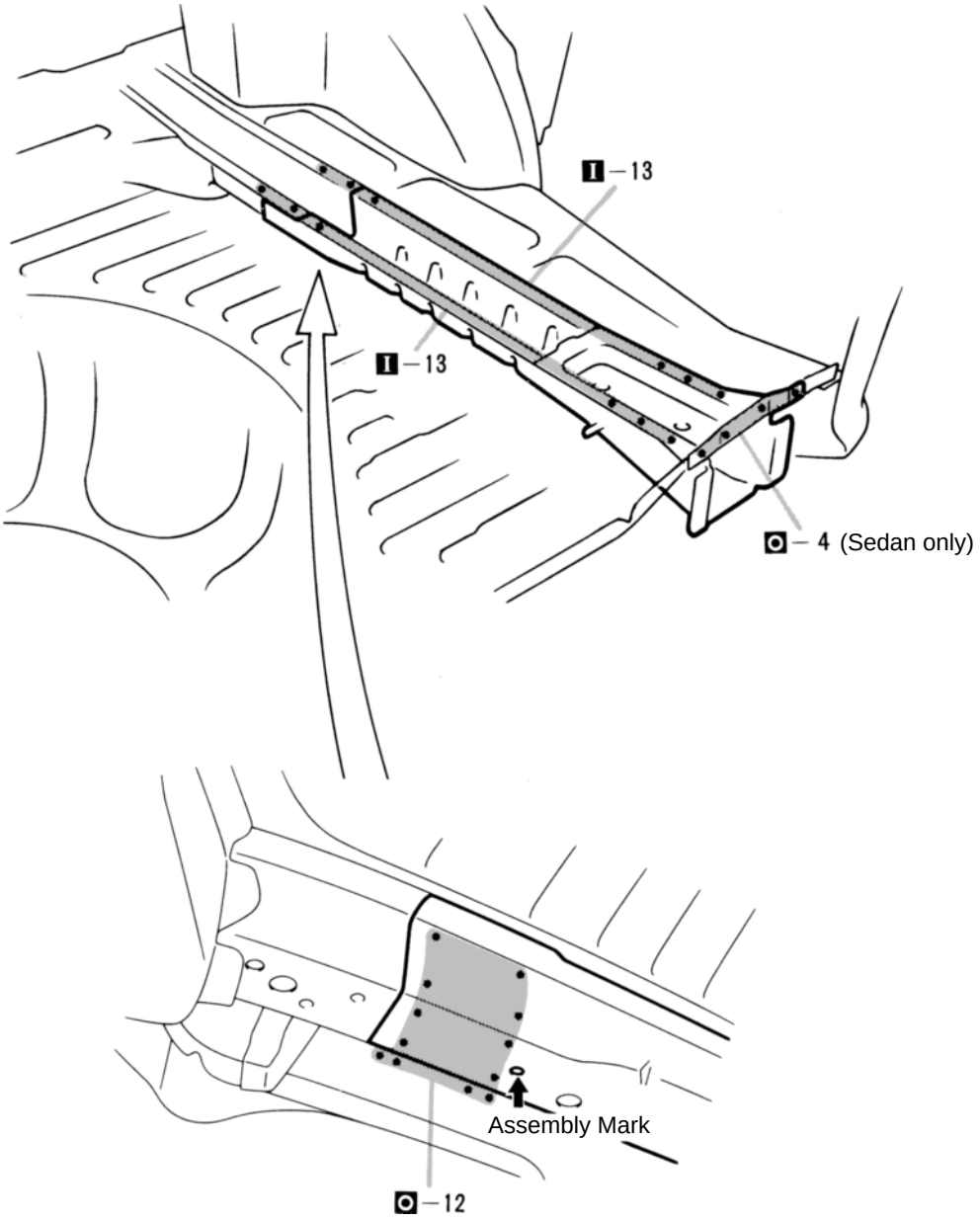

1. Determine the installation position of the new part by the assembly mark.
2. Temporarily install the new part and measure each part in accordance with the body dimension diagram.

REAR FLOOR SIDE MEMBER (ASSY)

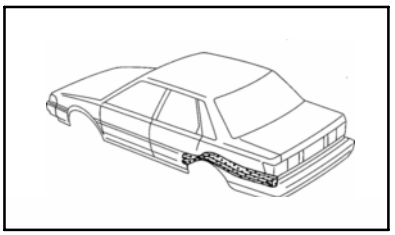

REMOVAL (With the rear floor pan removed.)

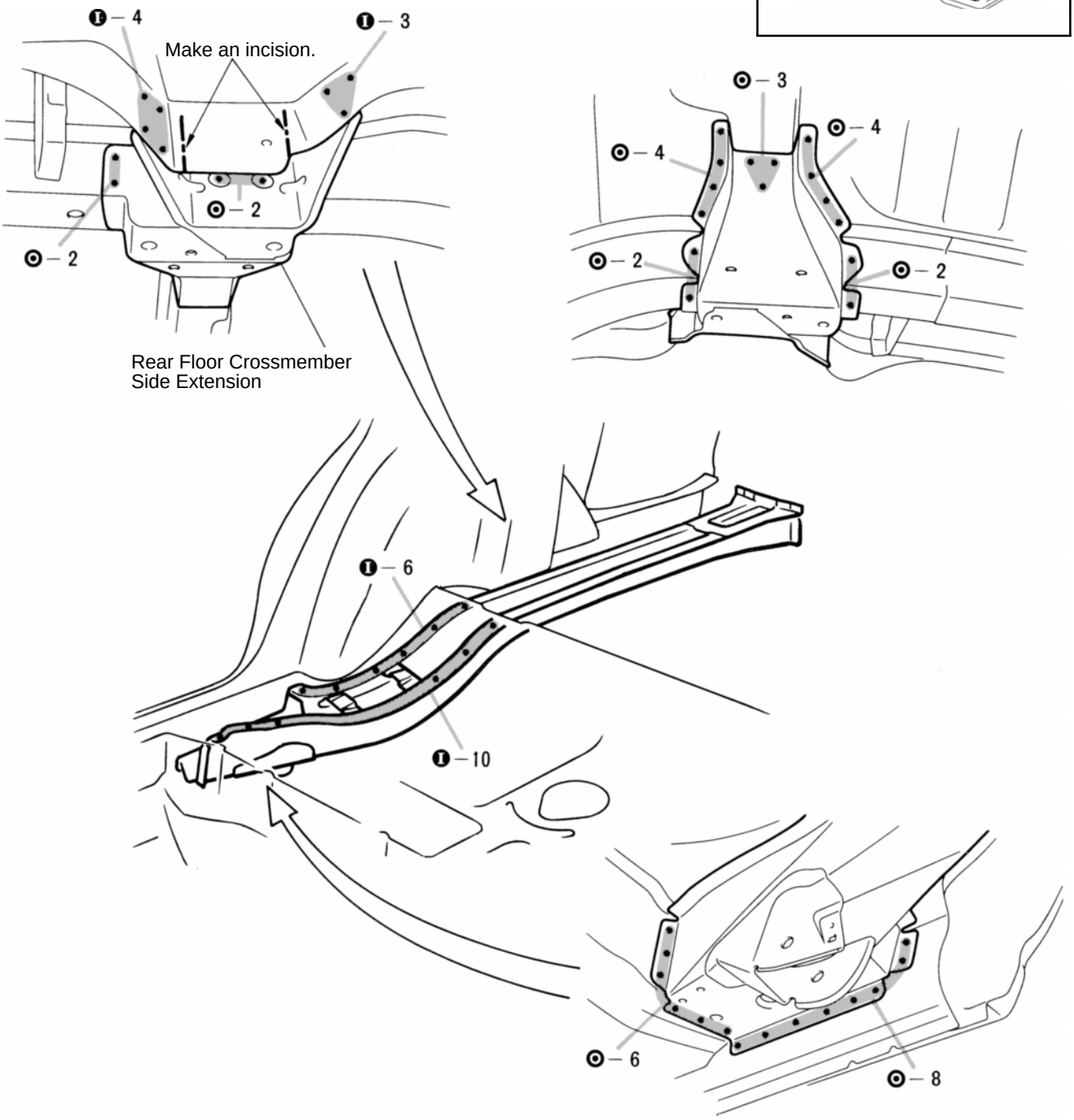

1. After removing the rear floor crossmember side extension, remove the rear floor side member.

INSTALLATION

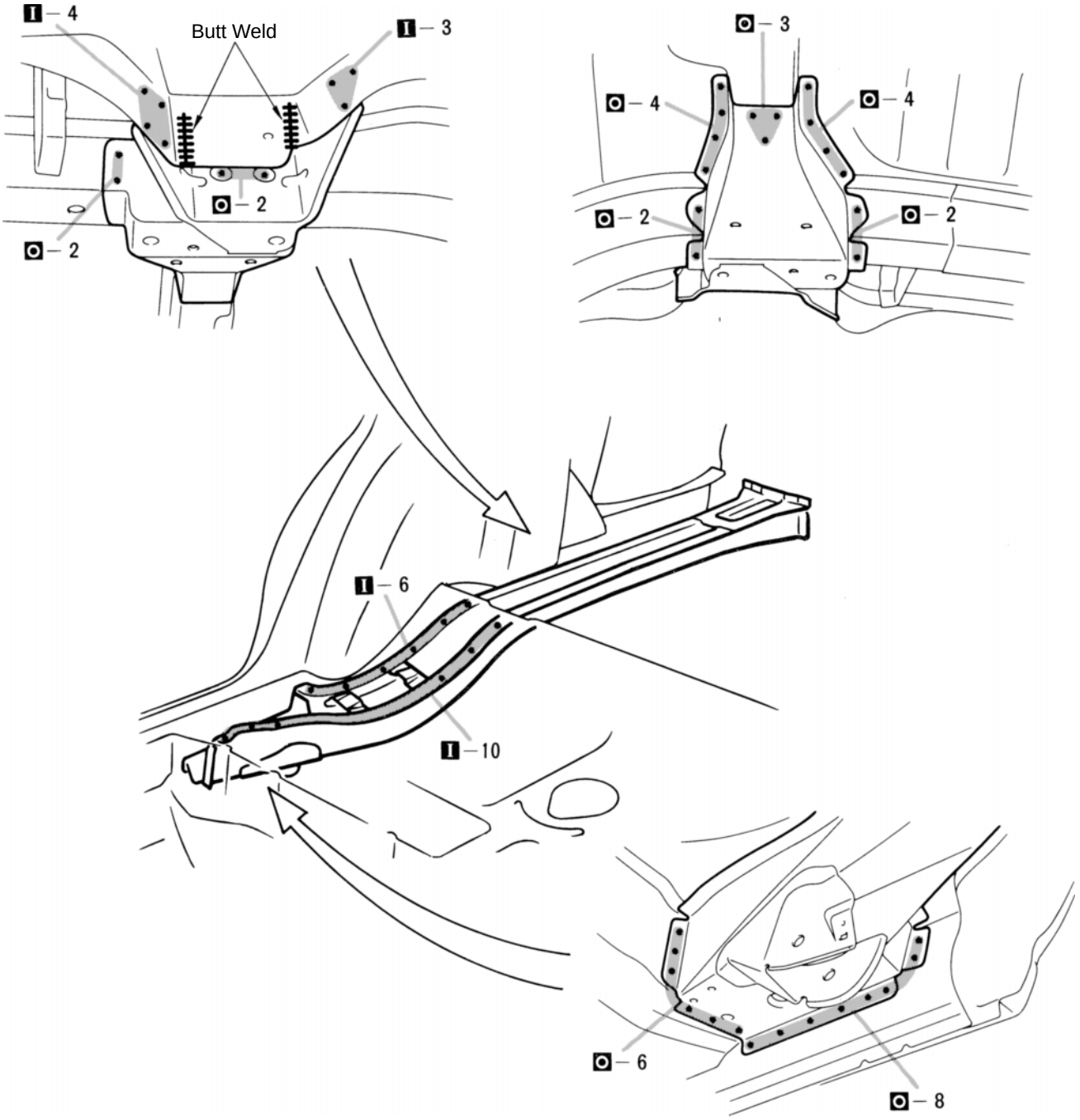

1. Temporarily install the new part and measure each part in accordance with the body dimension diagram.

CENTER FLOOR NO. 2 CROSSMEMBER (ASSY)

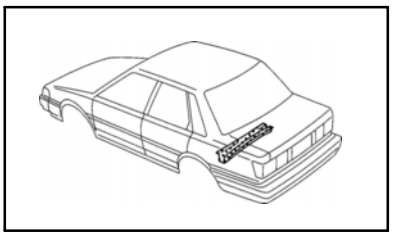

REMOVAL

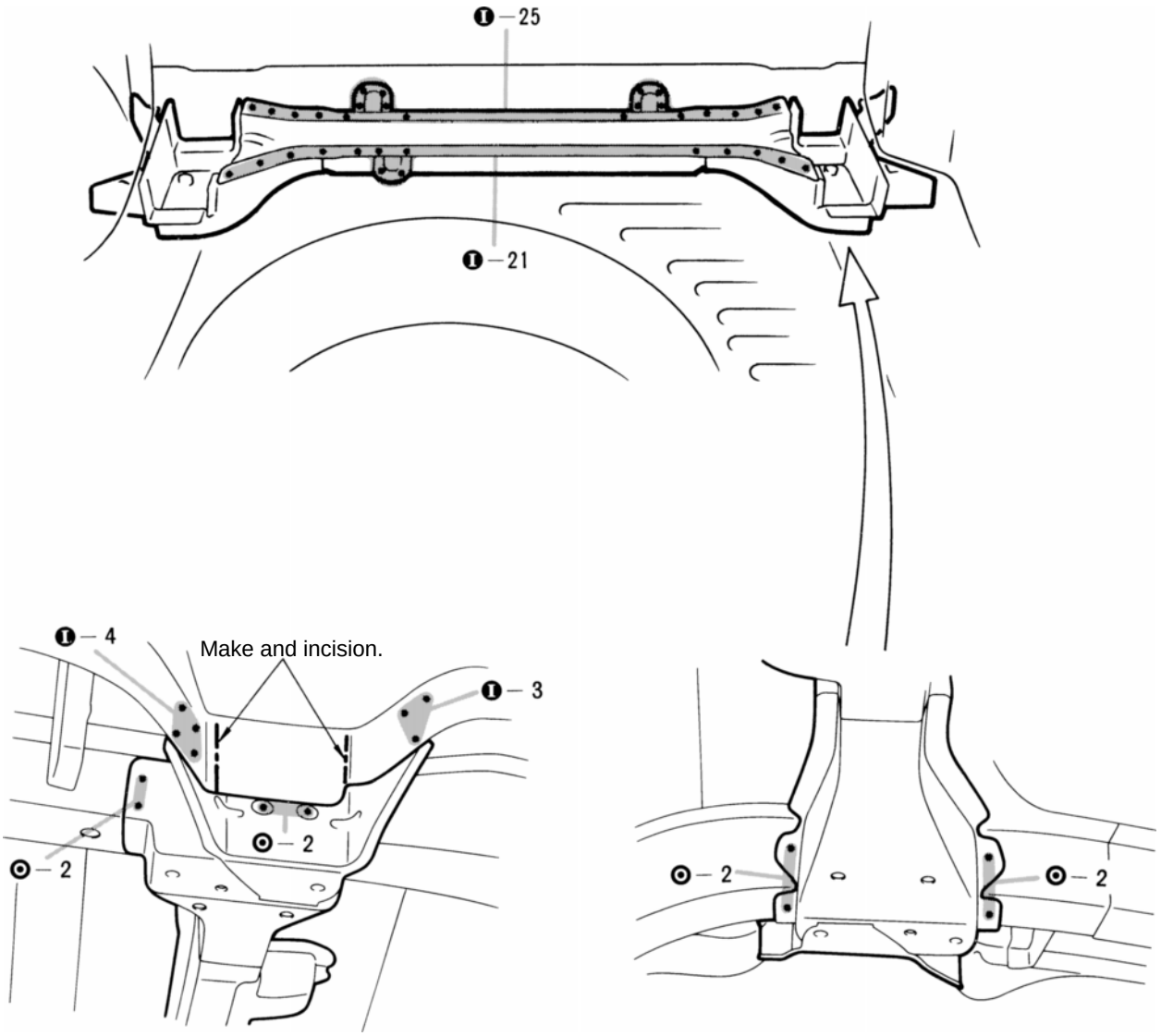

1. Bend the wheel housing inner panel after making an incision it where the rear floor side member is welded. Then remove the center floor No. 2 crossmember.

INSTALLATION

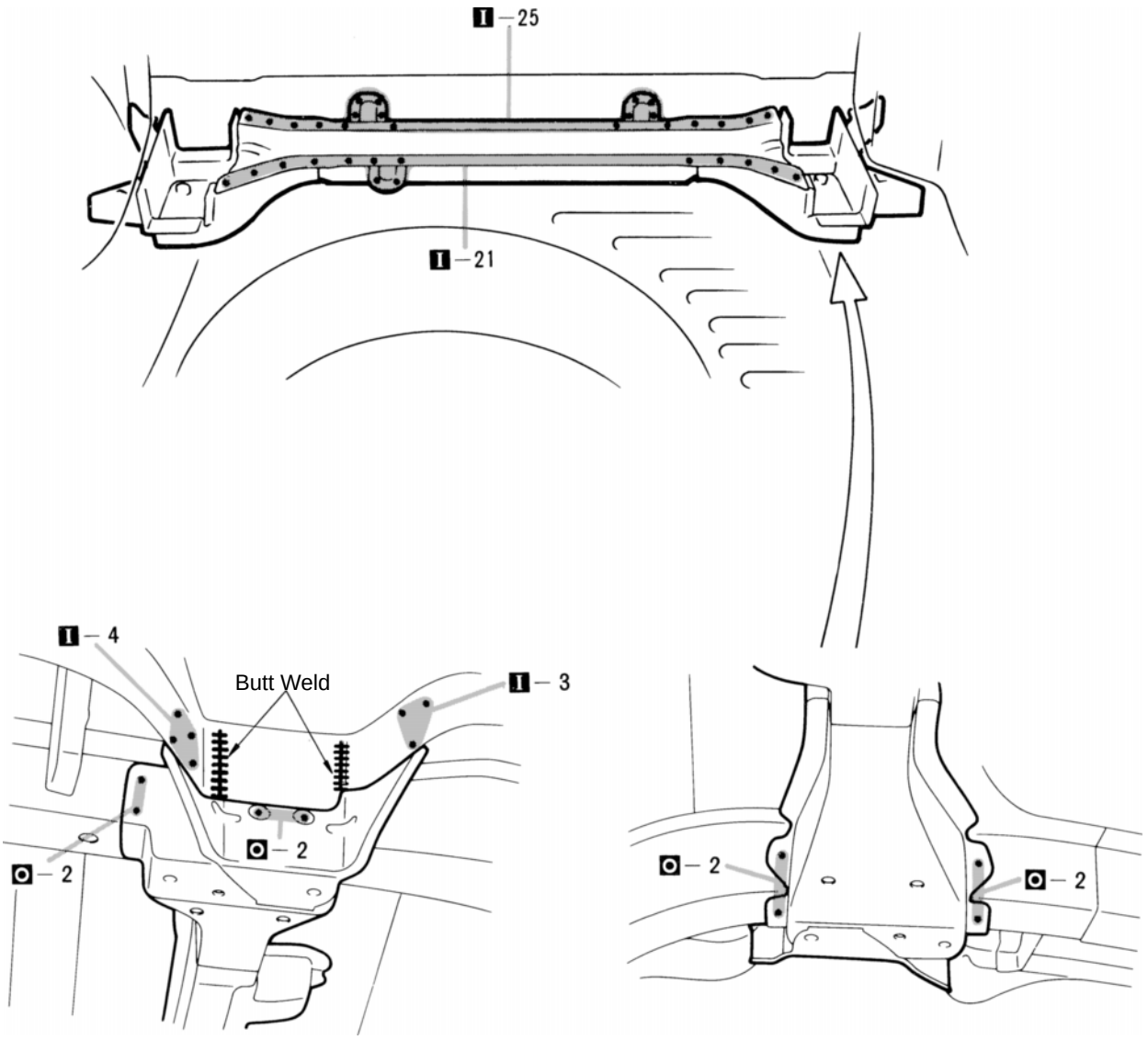

STANDARD BODY MARKS

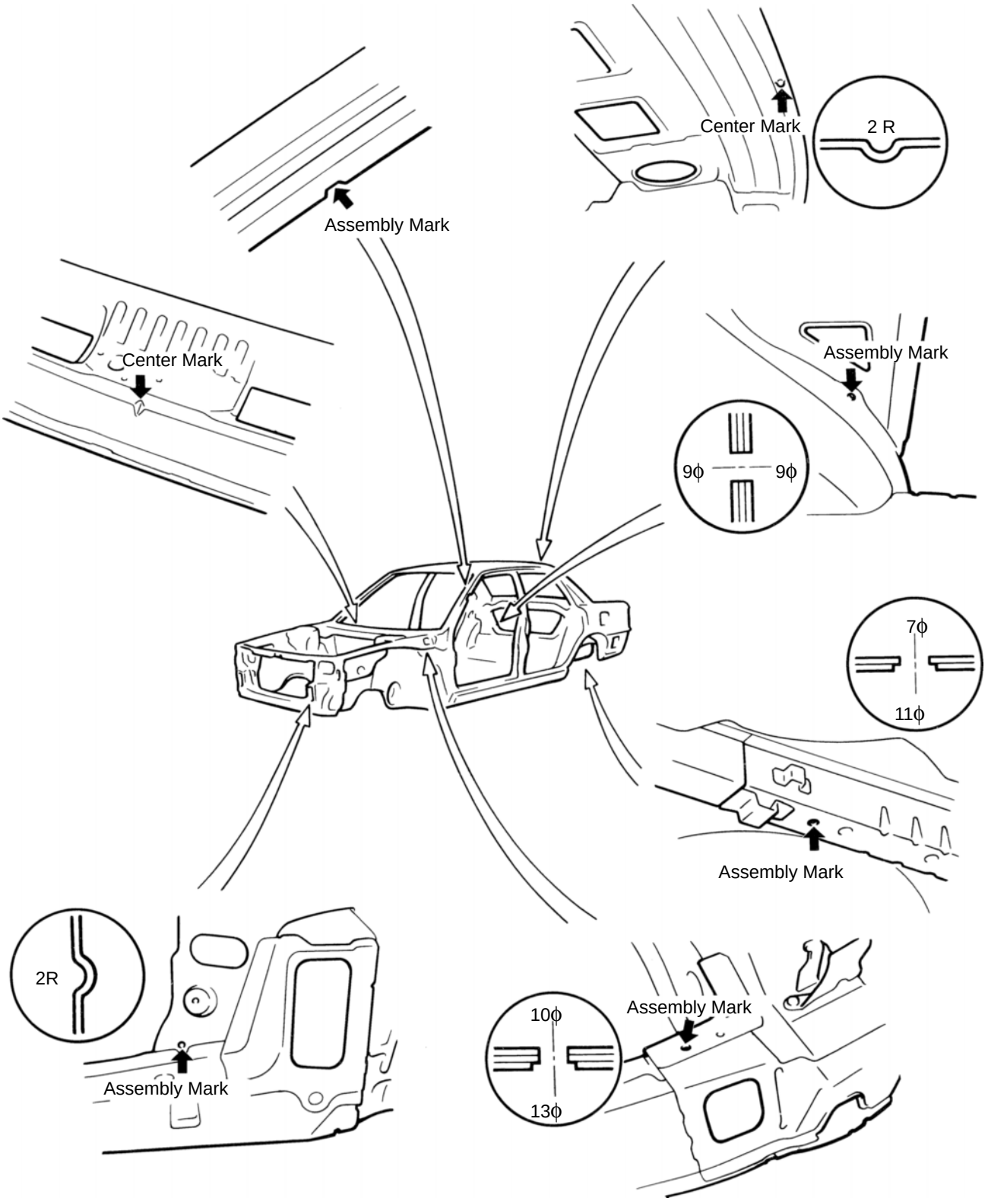

mm	in.
2	0.08
7	0.28
9	0.35
10	0.39
11	0.43
13	0.51

HIGH-STRENGTH STEEL (HSS) PARTS

Generally, High-Strength Steel (HSS) is that which has an intensity value of at least 35 kgf/mm^2, and distinguished from mild steel.

The handling of HSS is the same as for mild steel, but the following should be observed.

1. Panel Hammering: Because HSS is thinner than mild steel, care should be taken to avoid warping during hammering operations.
2. Removing Spot Welds: Because HSS is tougher than mild steel, damage will occur more easily to a regular drill. Therefore, an HSS-Spot Cutter is recommended.
   Also, use a high-torque drill at low speed, and supply grinding oil to the drill during use.
3. Panel Welding: Panel welding procedures for HSS are exactly the same as for mild steel. Plug welding should be done with a MIG (Metal Inert Gas) welder. Do not gas weld or braze panels at areas other than specified.

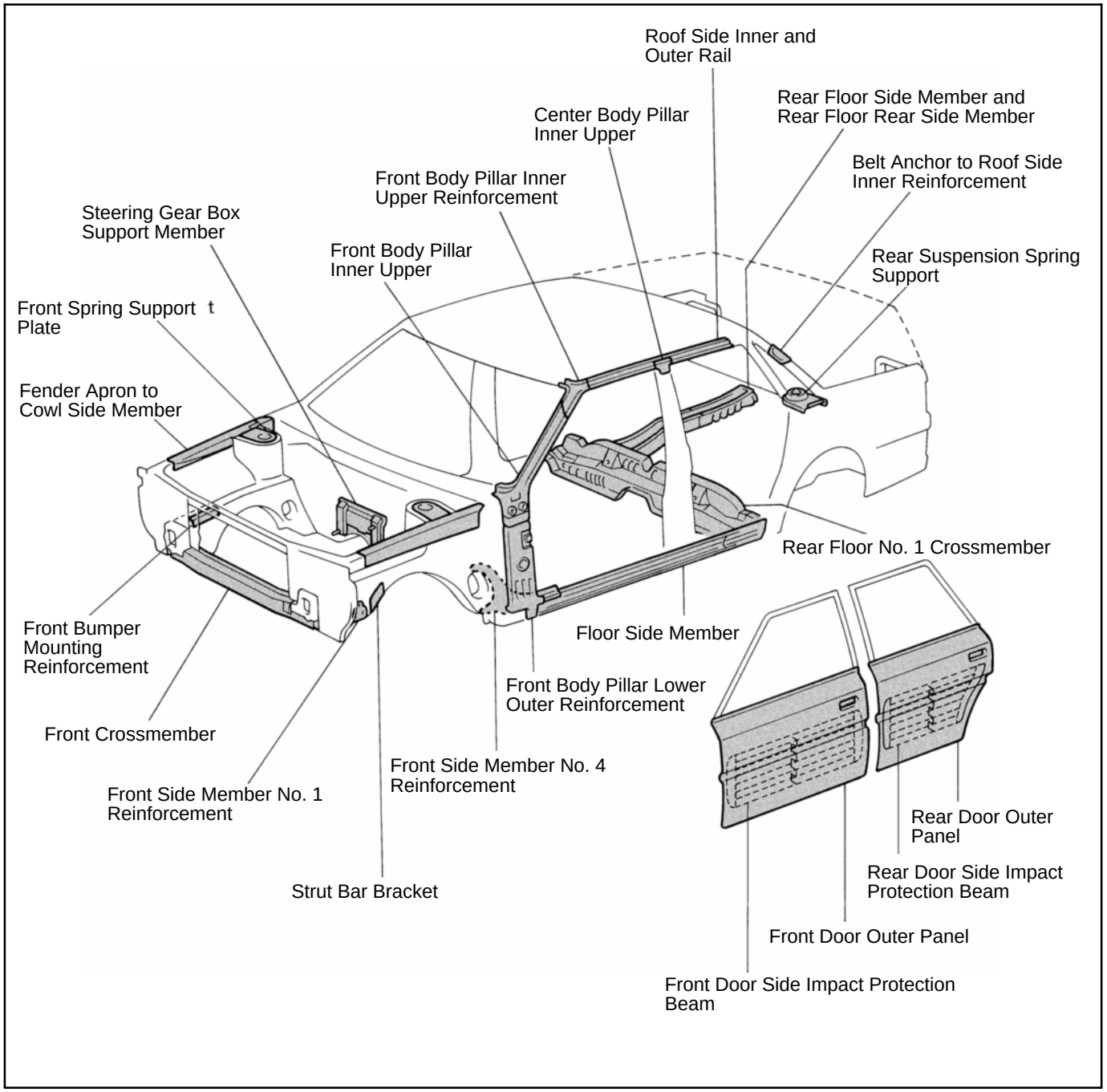

HANDLING PRECAUTIONS

1. The repair procedure for plastic body parts must conform with the type of plastic material.
2. Plastic body parts are identified by the codes in the following chart.
3. When repairing metal body parts adjoining plastic body parts (by brazing, frame cutting, welding, painting, etc.), consideration must given to the property of the plastic.

Code	Material name	Heat * resisting temperature °C (F°)	Resistance to alcohol or gasoline	Notes
AAS	Acrylonitrile Acrylic Rubber Styrene Resin	80 (176)	Alcohol is harmless if applied only for short time in small amounts (ex., quick wiping to remove grease).	Avoid gasoline and organic or aromatic solvents.
ABS	Acrylonitrile Butadiene Styrene Resin	80 (176)	Alcohol is harmless if applied only for short time in small amounts (ex., quick wiping to remove grease).	Avoid gasoline and organic or aromatic solvents.
AES	Acrylonitrile Ethylene Rubber Styrene Resin	80 (176)	Alcohol is harmless if applied only for short time in small amounts (ex., quick wiping to remove grease).	Avoid gasoline and organic or aromatic solvents.
EPDM	Ethylene Propylene Rubber	100 (212)	Alcohol is harmless. Gasoline is harmless if applied only for short time in small amounts.	Most solvents are harmless but avoid dipping in gasoline, solvents, etc.
PA	Polyamide (Nylon)	80 (176)	Alcohol and gasoline are harmless.	Avoid battery acid.
PC	Polycarbonate	120 (248)	Alcohol is harmless.	Avoid gasoline, brake fluid, wax, wax removers and organic solvents.
PE	Polyethylene	80 (176)	Alcohol and gasoline are harmless.	Most solvents are harmless.
POM	Polyoxymethylene (Polyacetal)	100 (212)	Alcohol and gasoline are harmless.	Most solvents are harmless.

*Temperature higher than those listed here may result in material deformation during repair.

Code	Material name	Heat * resisting temperature °C (F°)	Resistance to alcohol or gasoline	Notes
PP	Polypropylene	80 (176)	Alcohol and gasoline are harmless.	Most solvents are harmless.
PPO	Modified Polyphenylene Oxide	l00 (212)	Alcohol is harmless.	Gasoline is harmless if applied only for quick wiping to remove grease.
PS	Polystyrene	60 (140)	Alcohol and gasoline are harmless if applied only for short time in small amounts.	Avoid dipping or immersing in alcohol, gasoline, solvents, etc.
PUR	Thermosetting Polyurethane	80 (176)	Alcohol is harmless if applied only for very short time in small amounts (ex., quick wiping to remove grease).	Avoid dipping or immersing in alcohol, gasoline, solvents, etc.
PVC	Polyvinylchloride (Vinyl)	80 (176)	Alcohol and gasoline are harmless if applied only for short time in small amounts (ex., quick wiping to remove grease).	Avoid dipping or immersing in alcohol, gasoline, solvents, etc.
PMMA	Polymethyl Methacrylate	80 (176)	Alcohol is harmless if applied only for short time in small amounts.	Avoid dipping or immersing in alcohol; gasoline, solvents, etc.
SAN	Styrene Acrylonitrile Resin	80 (176)	Alcohol is harmless if applied only for short time in small amounts (ex., quick wiping to remove grease).	Avoid dipping or immersing in alcohol, gasoline, solvents, etc.
SMC	Sheet Moulding Compound	180 (356)	Alcohol and gasoline are harmless.	Avoid alkali
TPO	Thermoplastic Olefine	80 (176)	Alcohol is harmless. Gasoline is harmless if applied only for short time in small amounts.	Most solvents are harmless but avoid dipping in gasoline, solvents, etc.
TPU	Thermoplastic Polyurethane	80 (176)	Alcohol is harmless if applied only for very short time in small amounts (ex., quick wiping to remove grease).	Avoid dipping or immersing in alcohol, gasoline, solvents, etc.
UP	Unsaturated Polyester	110 (233)	Alcohol and gasoline are harmless.	Avoid alkali

* Temperature higher than those listed here may result in material deformation during repair.

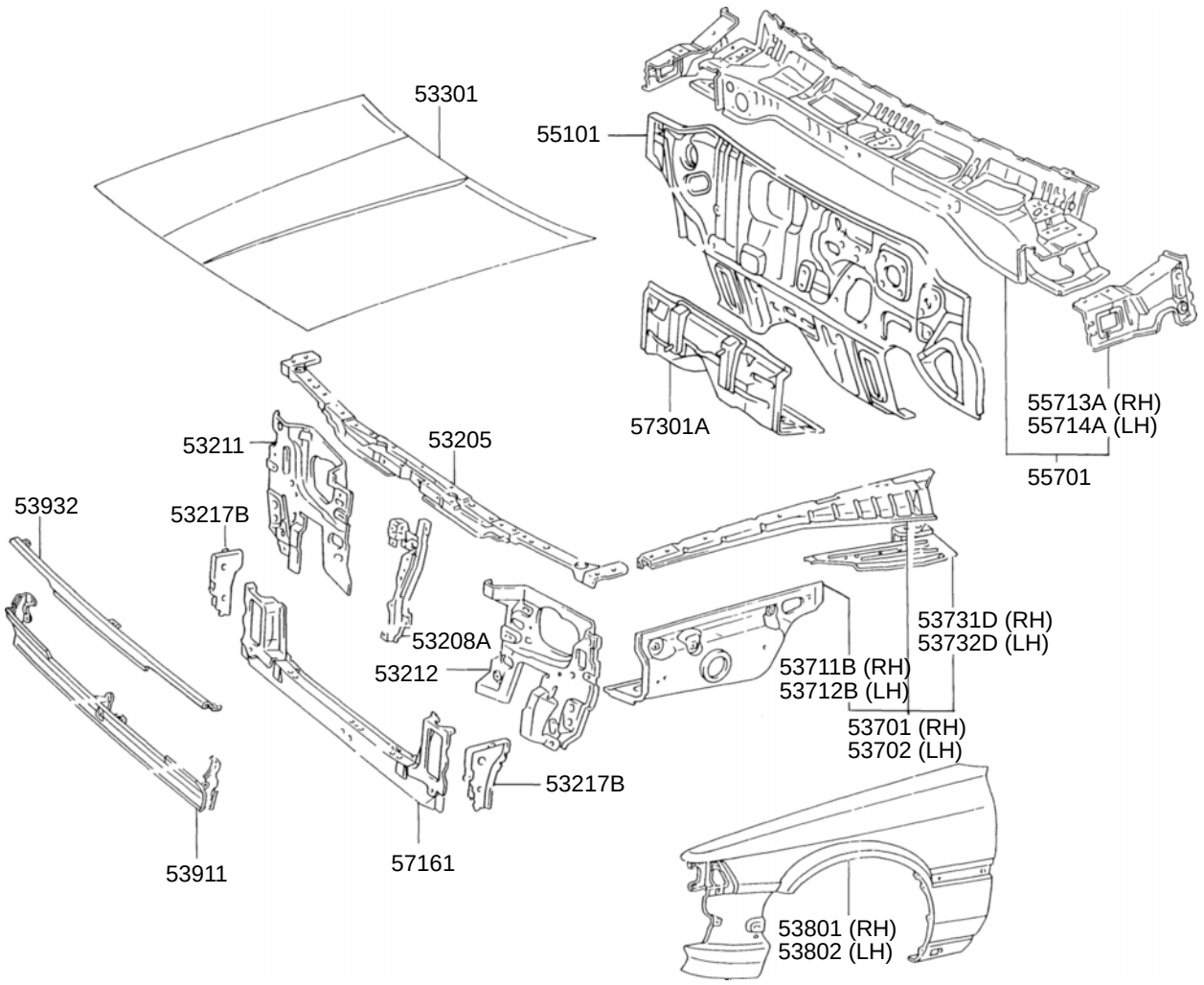

Code	Part Name	Code	Part Name
53205	Radiator Upper Support Sub-Assy	53801 53802	Front Fender Sub-Assy
53208A	Hood Lock Support Sub-Assy		
53211 53212	Radiator Support	53911	Front Valance Panel
		53932	Front End Panel Sub-Assy
53217B	Radiator Support to Crossmember Brace	55101	Dash Panel Sub-Assy
53301	Hood Sub Assy	55701	Cowl Panel Sub-Assy
53701 53702	Front Fender Apron Sub-Assy	55713A 55714A	Cowl Top Side Panel
53711B 53712B	Front Fender Front Apron	57161	Front Crossmember
		57301A	Steering Gear Box Support Member Sub-Assy
53731D 53732D	Front Apron to Cowl Side Upper Member	—	—

Sedan

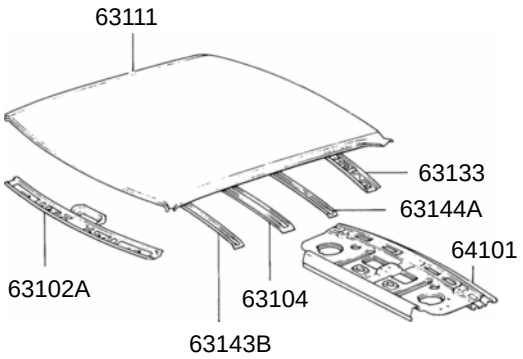

Wagon

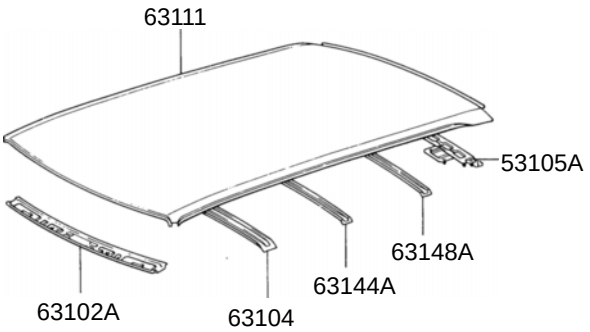

Sedan

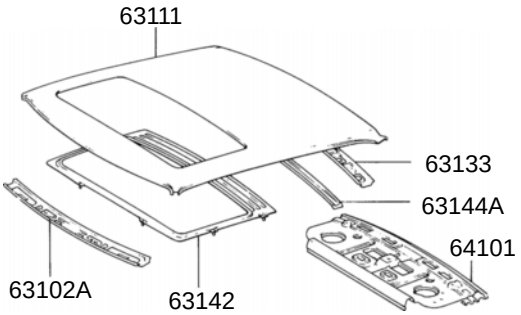

Wagon

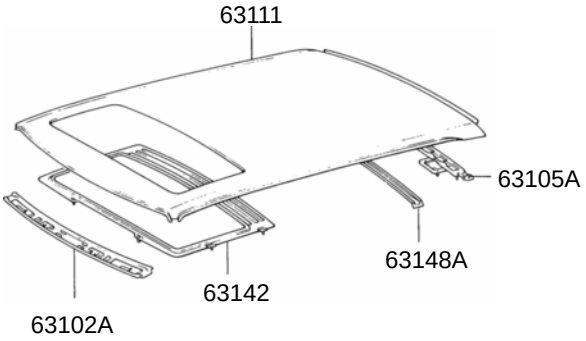

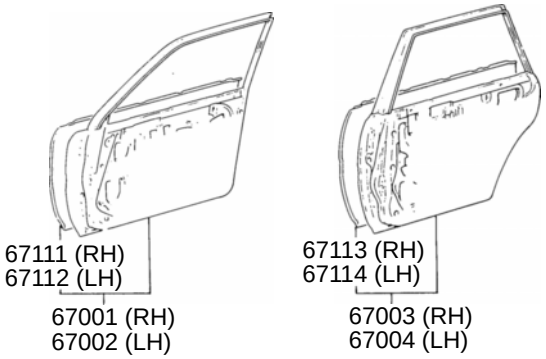

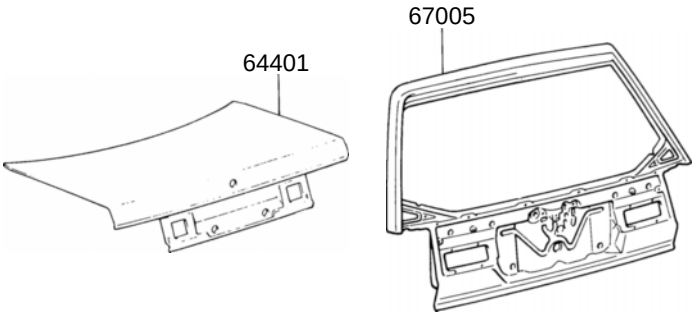

Code	Part Name	Code	Part Name
63102A	Windshield Header Panel Sub-Assy	64401	Luggage Compartment Door Panel Sub-Assy
63104	Roof Panel Center Reinforcement Sub-Assy	67001 67002	Front Door Panel Sub-Assy
63105A	Back Door Opening Frame Sub-Assy		
63111	Roof Panel	67003 67004	Rear Door Panel Sub-Assy
63133	Back Window Opening Upper Frame		
63142	Roof Panel No. 2 Reinforcement	67005	Back Door Panel Sub-Assy
63143B	Roof Panel No. 3 Reinforcement	67111 67112	Front Door Outlet Panel
63144A	Roof Panel No. 4 Reinforcement		
63148A	Roof Panel No. 7 Reinforcement	67113 67114	Rear Door Outer Panel
64101	Upper Back Panel Sub-Assy		

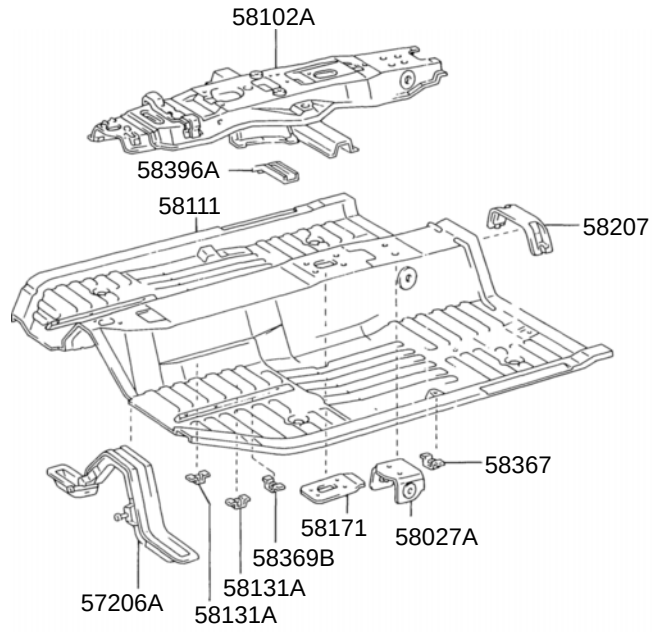
58102A
58396A
58111
58207
58367
58171
58027A
58369B
58131A
58131A
57206A

Sedan

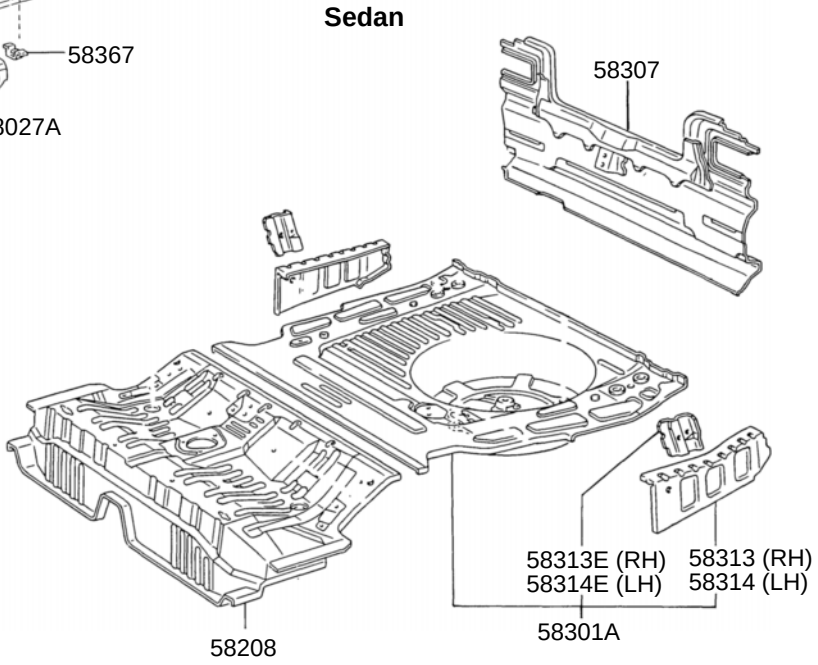
58307
58313E (RH)
58314E (LH)
58313 (RH)
58314 (LH)
58301A
58208

Wagon

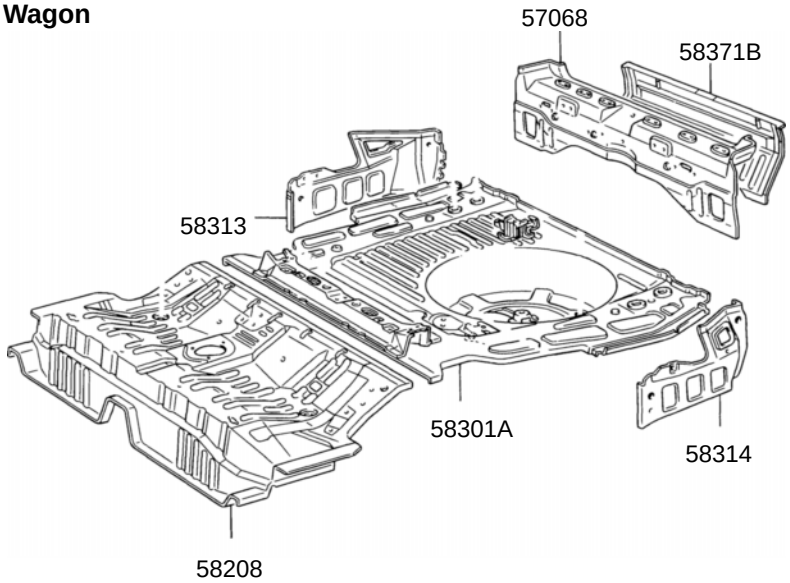
57068
58371B
58313
58301A
58314
58208

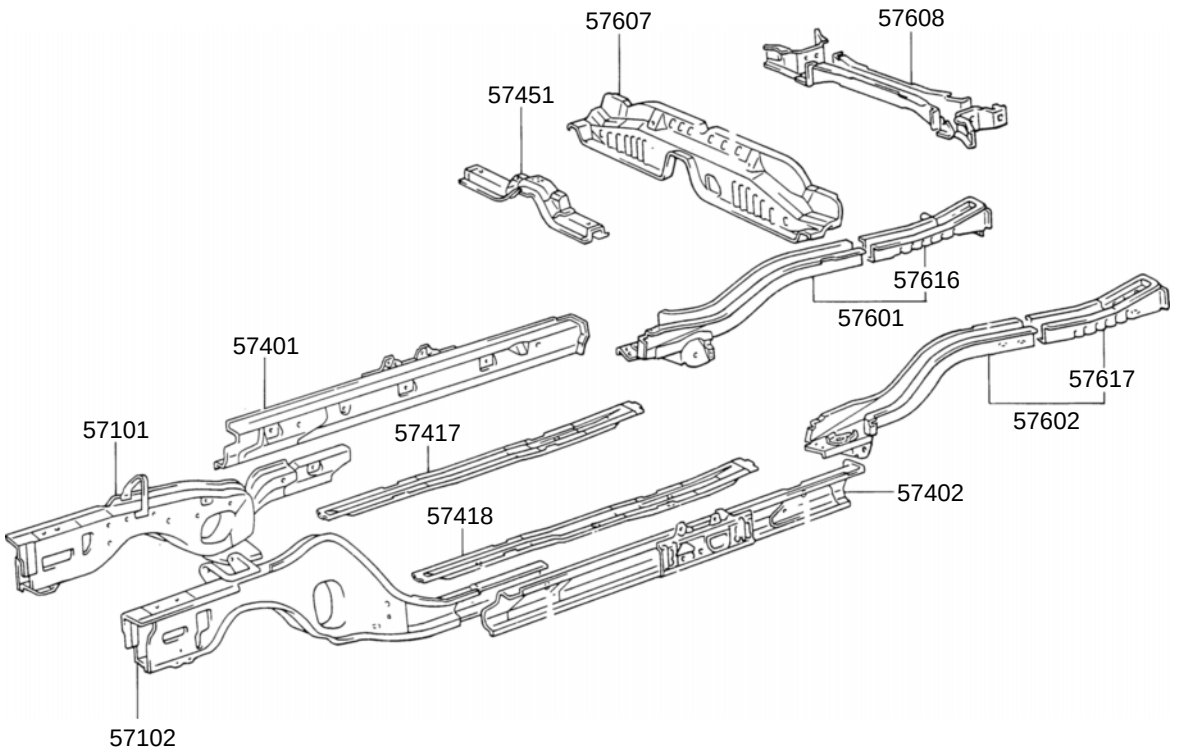

Code	Part Name	Code	Part Name
57068	Rear Floor Rear Inner Crossmember Sub-Assy	58102A	Front Floor Reinforcement Sub-Assy
		58111	Front Floor Pan
57101 57102	Front Side Member Sub-Assy	58131A	Front Floor Heat Insulator No. 1 Bracket
		58171	Parking Brake Base Reinforcement
57206A	Front Floor No. 2 Cross Member Sub-Assy	58207	Parking Brake Cable No. 1 Bracket Sub-Assy
57401 57402	Main Floor Side Member Sub-Assy	58208	Center Floor Pan
		58301A	Rear Floor Panel Sub-Assy
57417 57418	Front Floor Under Reinforcement	58307	Body Lower Back Panel Sub-Assy
		58313 58314	Rear Floor Side Panel
57451	Front Floor Crossmember Member		
57601 57602	Rear Floor Side Member Sub-Assy	58313E 58314E	Rear Floor Side Panel Extension
57607 57608	Rear Floor No. 1 Crossmember Sub-Assy	58367	Fuel Tube Clamp Bracket
		58369B	Fuel Tube No. 3 Bracket
57616 57617	Rear Floor Rear Side Member	58371B	Body Lower Back Outer Panel
		58396A	Wire Harness Clamp Bracket
58027A	Seat Belt Anchor Reinforcement Sub-Assy	—	—

Sedan

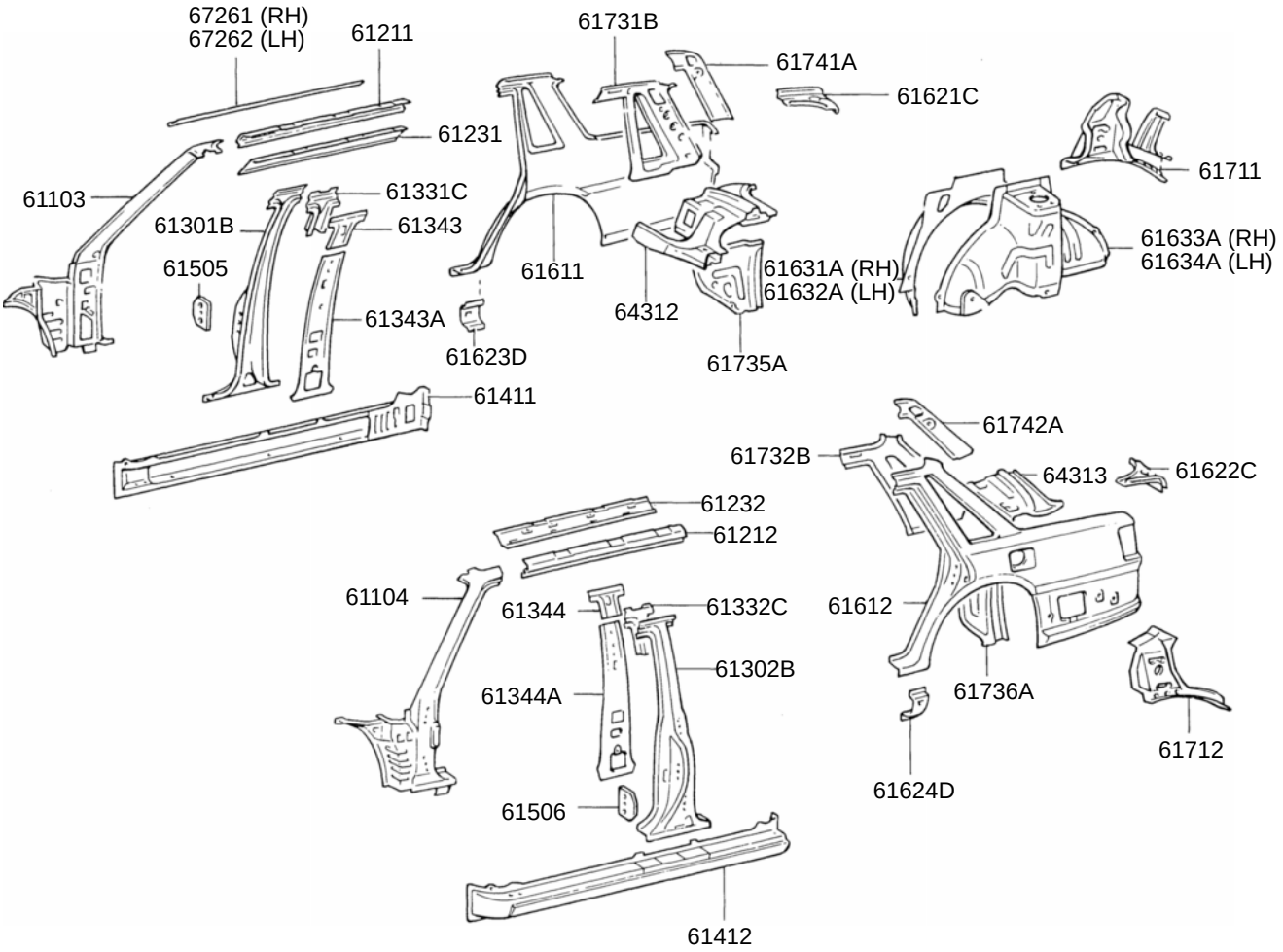

Code	Part Name	Code	Part Name
61103 61104	Front Body Pillar Sub-Assy	61611 61612	Quarter Panel
61211 61212	Roof Side Outer Rail	61621C 61622C	Luggage Compartment Opening Trough
61231 61232	Roof Side Inner Rail	61623D 61624D	Quarter Panel Front Extension
61261 61262	Roof Drip Channel	61631A 61632A	Quarter Wheel Housing Outer Panel
61301B 61302B	Center Body Outer Pillar	61633A 61634A	Quarter Wheel Housing inner Panel
61331C 61332C	Center Pillar Upper Outer Reinforcement	61711 61712	Roof Side Outer Panel
61343 61344	Center Body Inner Upper Pillar	61731B 61732B	Roof Side Inner Panel
61343A 61344A	Center Body Inner Pillar	61735A 61736A	Roof Side Inner Rear Panel
61411 61412	Rocker Outer Panel	61741A 61742A	Back Door Opening Upper Reinforcement
61505 61506	Front Door Lock Striker Reinforcement Sub-Assy	64312 64313	Package Tray Bracket

Wagon

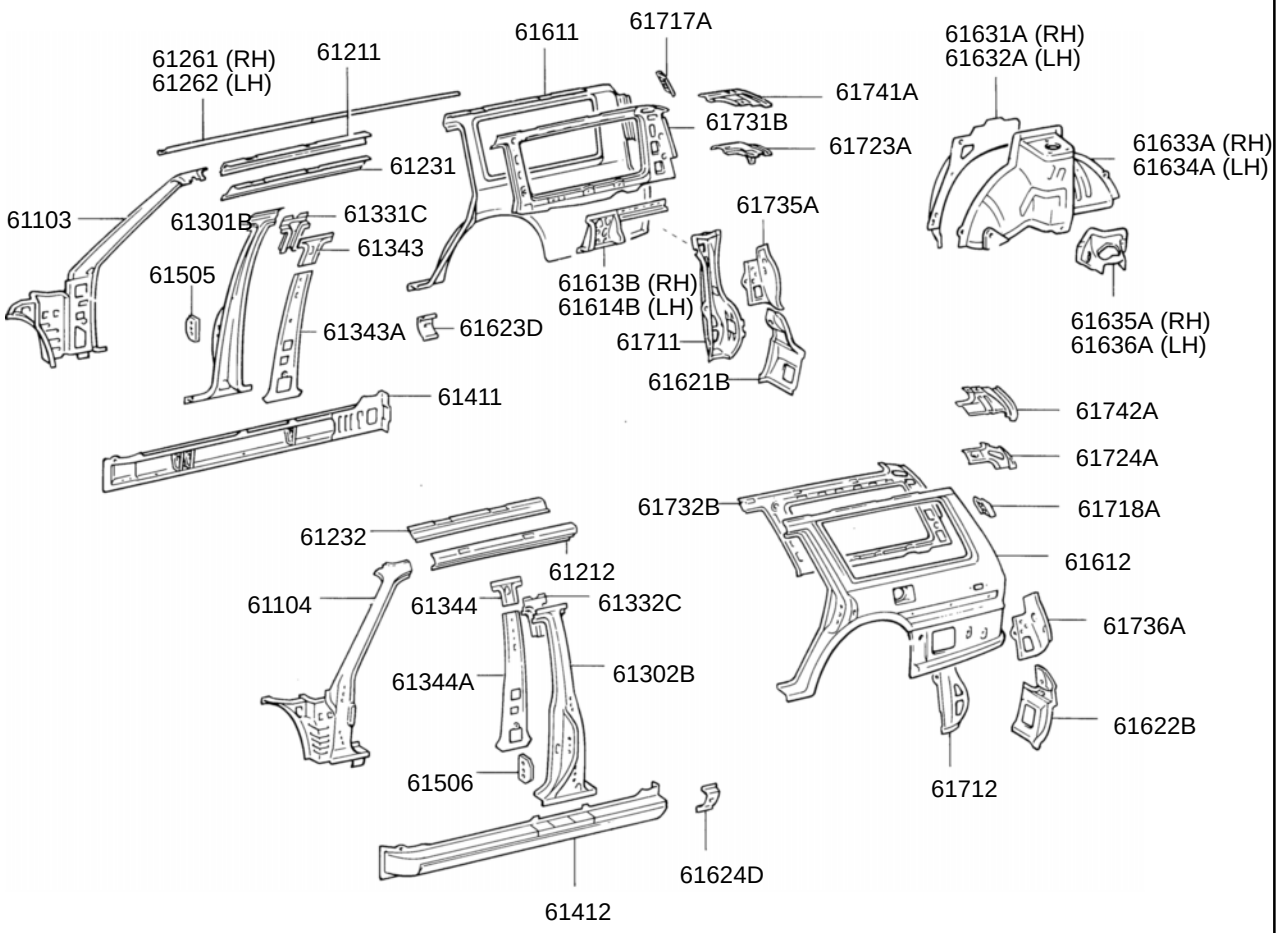

Code	Part Name	Code	Part Name
61103 61104	Front Body Pillar Sub-Assy	61621B 61622B	Back Door Opening Front Trough
61211 61212	Roof Side Outer Rail	61623D 61624D	Quarter Panel Front Extension
61231 61232	Roof Side Inner Rail	61631A 61632A	Quarter Wheel Housing Outer Panel
61261 61262	Roof Drip Channel	61633A 61634A	Quarter Wheel Housing Inner Panel
61301B 61302B	Center Body Outer Pillar	61635A 61636A	Quarter Wheel Housing Brace
61331C 61332C	Center Pillar Upper Outer Reinforcement	61711 61712	Roof Side Outer Panel
61343 61344	Center Body Inner Upper Pillar	61717A 61718A	Quarter Panel Extension Reinforcement
61343A 61344A	Center Body Inner Pillar	61723A 61724A	Quarter Window Opening Reinforcement
61411 61412	Rocker Outer Panel	61731B 61732B	Roof Side Inner Panel
61505 61506	Front Door Lock Striker Reinforcement Sub-Assy	61735A 61736A	Roof Side Inner Rear Panel
61611 61612	Quarter Panel	61741A 61742A	Back Door Opening Upper Reinforcement
61613B 61614B	Quarter Inner Front Panel	—	—

LOCATION OF PLASTIC BODY PARTS

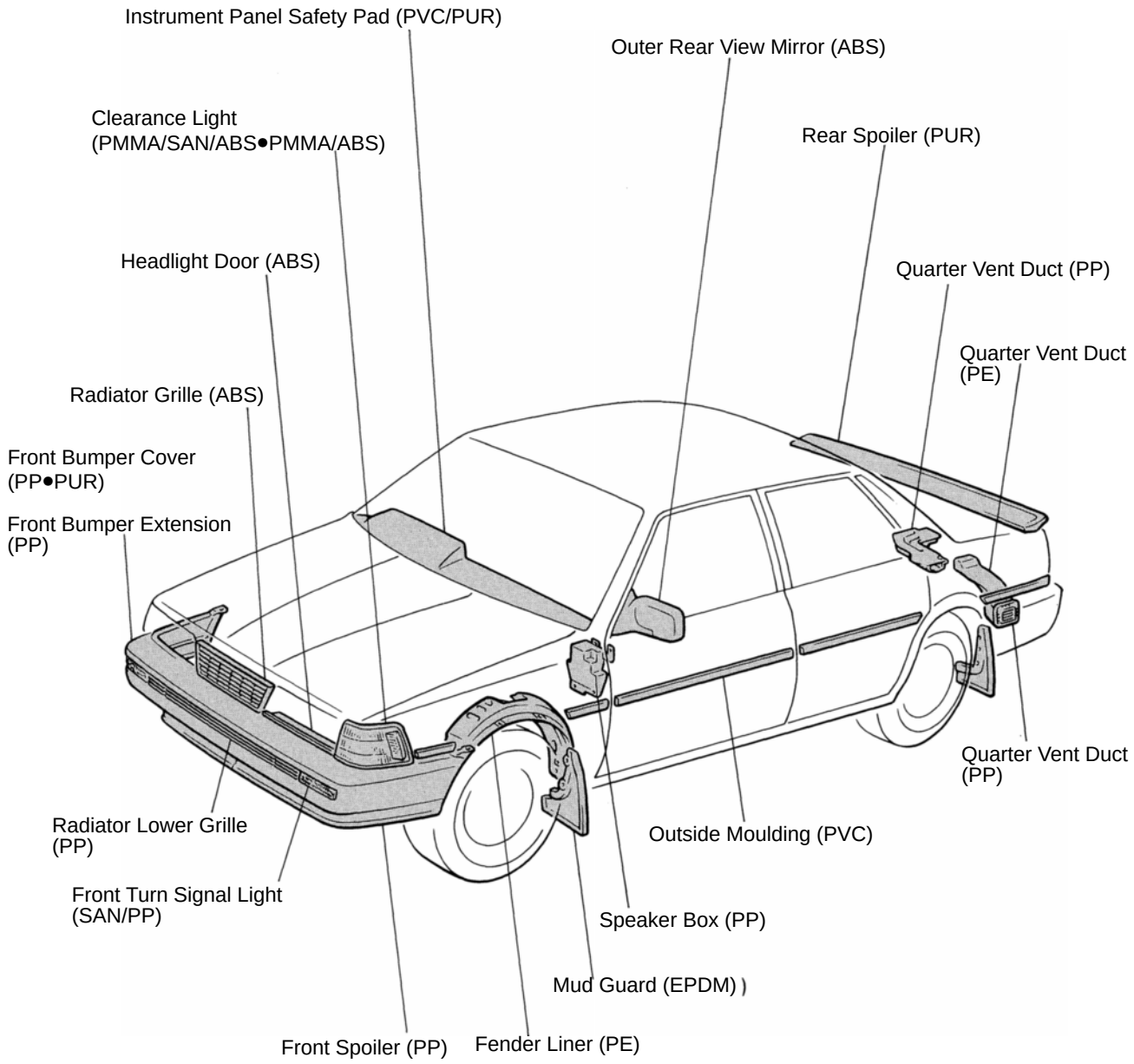

NOTE:

- **Resin material differs with model.**

/ Made up of 2 or more kinds of materials.

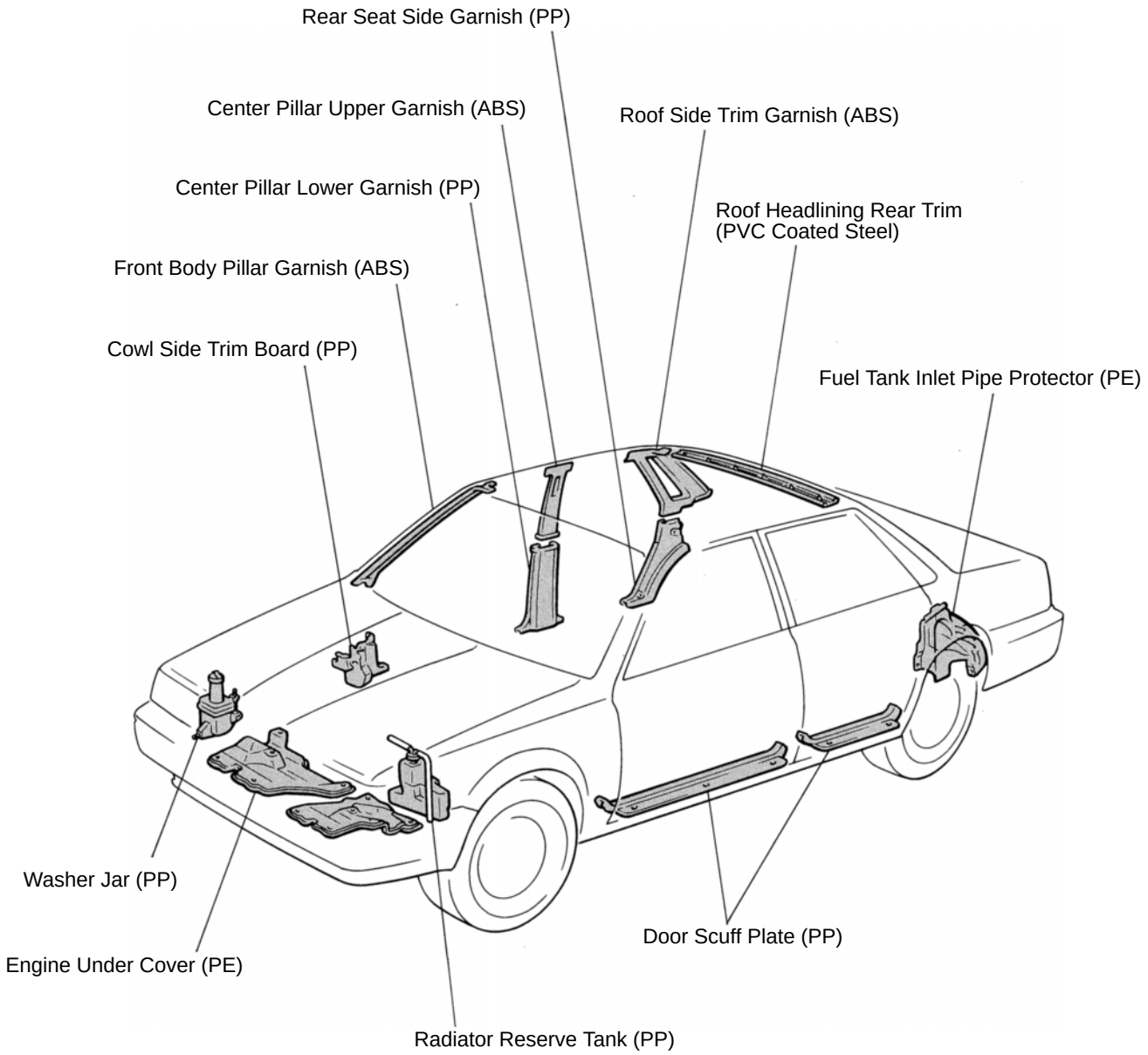

NOTE:

- **Resin material differs with model.**

/ Made up of 2 or more kinds of materials.

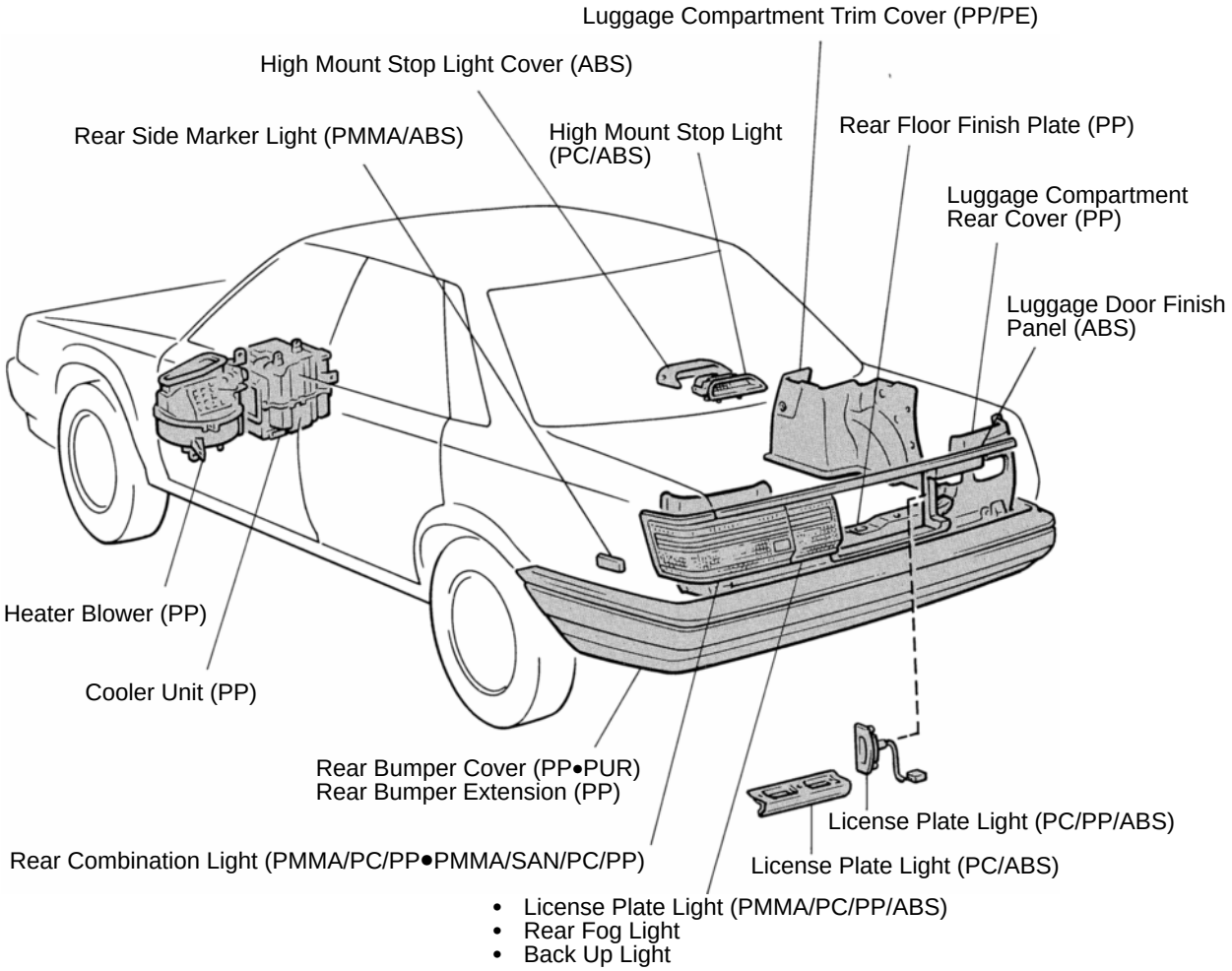

[Wagon only]

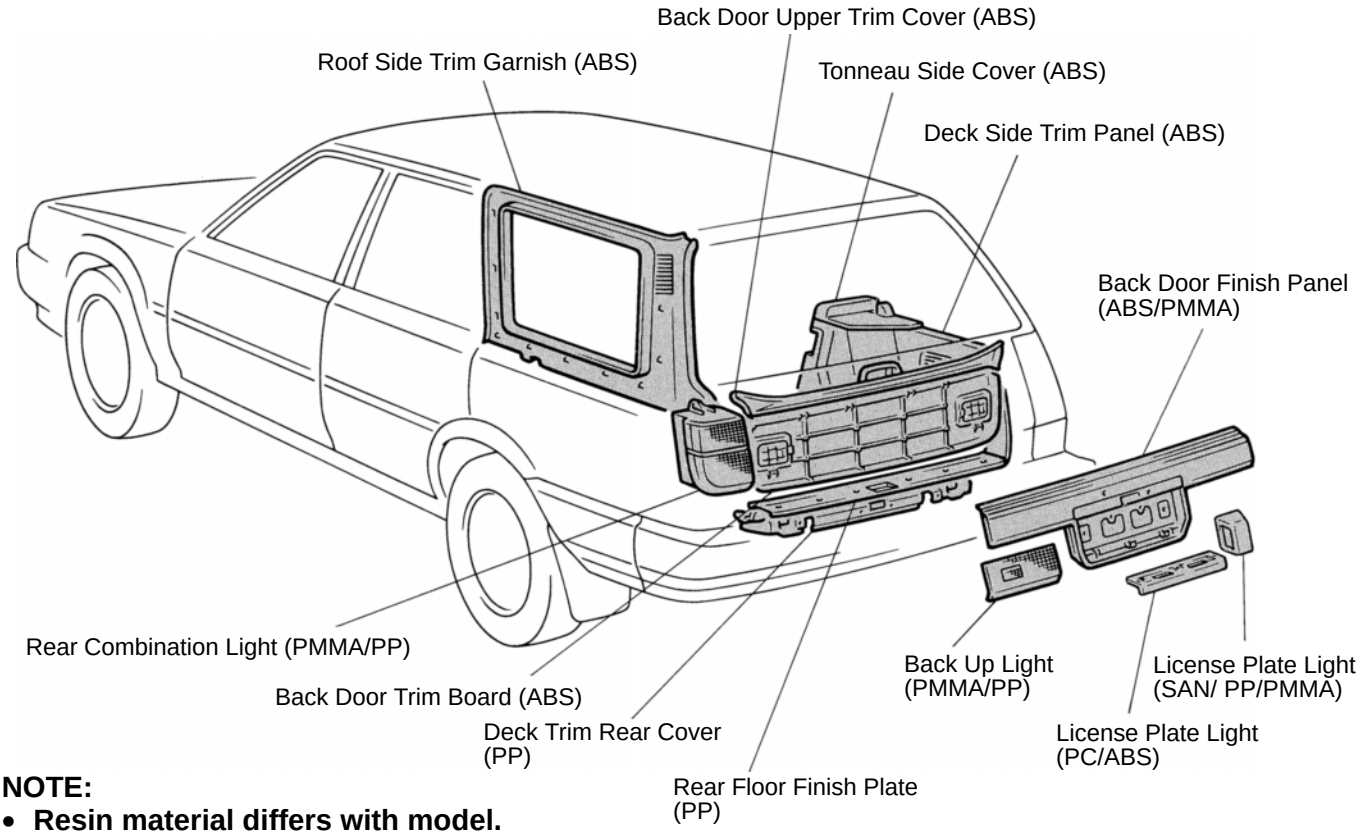

NOTE:
- **Resin material differs with model.**
- **/ Made up of 2 or more kinds of materials.**

GENERAL INFORMATION

Anti-rust treatment is necessary before welding and before and after the painting process.

ANTI-RUST TREATMENT BEFORE WELDING

1. WELD-THROUGH PRIMER (SPOT SEALER) APPLICATION

For anti-corrosion measures, always apply the weld-through primer (spot sealer) to welding surfaces where the paint film was removed.

NOTE: Apply the weld-through primer (spot sealer) so that it does not ooze out from the joining surfaces.

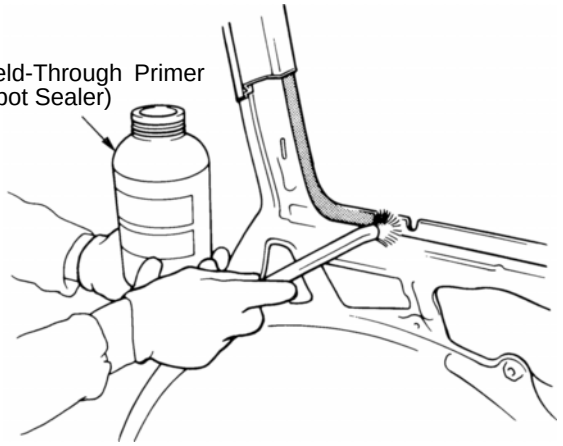

WELD-THROUGH PRIMER (SPOT SEALER) APPLICATION

ANTI-RUST TREATMENT BEFORE PAINTING PROCESS

1. BODY SEALER APPLICATION

For waterproofing and anti-corrosion measures, always apply the body sealer to the body panel seams and hems of the doors, hoods, etc.

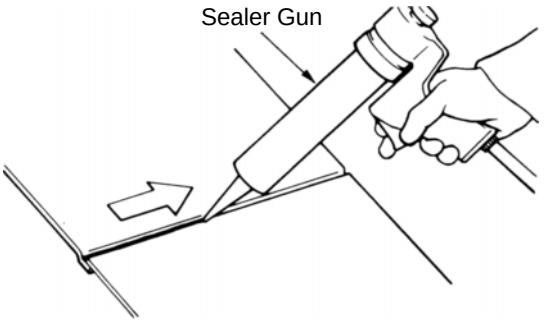

BODY SEALER APPLICATION

2. UNDERCOAT APPLICATION

To prevent corrosion and protect the body from damage by flying stones, always apply the undercoat enough to the bottom surface of the under body and inside of the wheel housings.

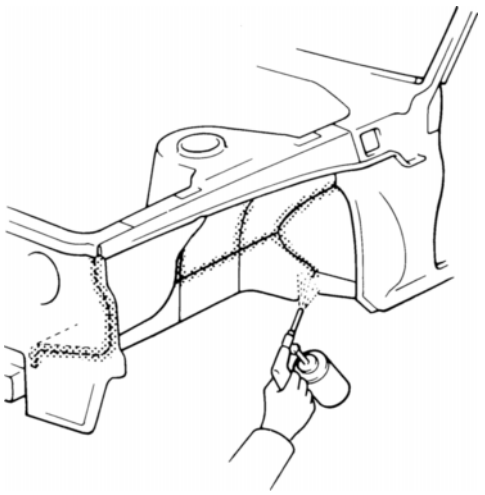

UNDERCOAT APPLICATION

ANTI-RUST TREATMENT AFTER PAINTING PROCESS

1. ANTI-RUST AGENT (WAX) APPLICATION

To prevent painting impossible areas from corrosion, always apply the anti-rust agent (wax) enough to the inside of the hemming areas of the doors and hoods, and around the hinges, or the welded surfaces inside the boxed cross-section structure of the side member, body pillar, etc.

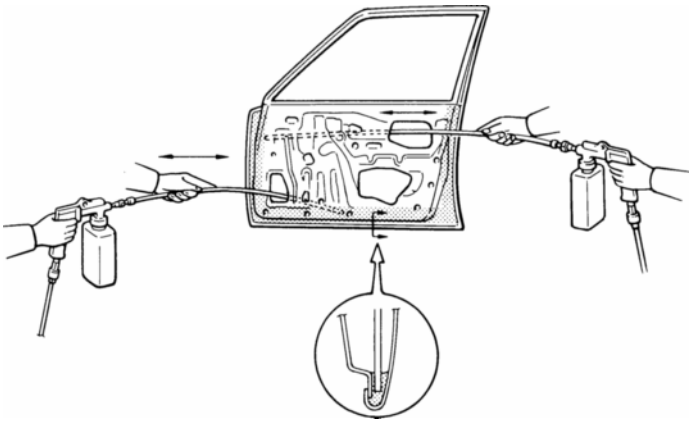

ANTI-RUST AGENT (WAX) APPLICATION

REFERENCE: ANTI-RUST TREATMENT BY PAINTING

Painting prevents corrosion and protects the sheet metal from damage. In this section, the anti-chipping paint only for the anti-corrosion purpose is described.

1. ANTI-CHIPPING PAINT

To prevent corrosion and protect the body from damage by flying stones, etc., apply the anti-chipping paint to the rocker panel, wheel arch areas, valance panel, etc.

NOTE:

According to the models or application areas, there are two cases where the application is necessary before a second coating and after a top coating.

- Apply the anti-chipping paint after a top coating.

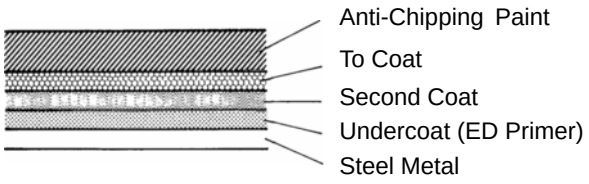

- Apply the anti-chipping paint before a second coating.

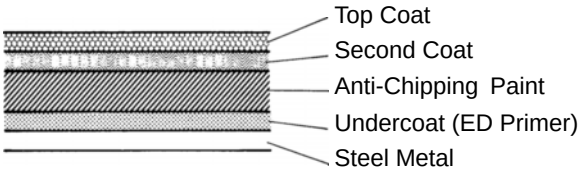

BODY PANEL UNDERCOATING AREAS

NOTE:

1. **First wipe off any dirt, grease or oil with a rag soaked in grease, wax and silicone remover.**
2. **Cover the surrounding areas with masking paper to avoid coating unnecessary areas. If other areas are accidently coated, wipe off the coating immediately.**
3. **Apply the first coating of undercoat to all welded areas and panel joints, then apply a second coat over entire area.**
4. **Do not coat parts which become hot, such as the tailpipe, or moving parts, such as the propeller shaft.**
5. **Besides the locations described below, apply undercoating to all weld points under the body to insure corrosion prevention.**
6. **Be sure to seal the edge of the flange of the member and bracket with undercoating.**
7. **If undercoat is damaged by peeling, cracks, etc., be sure to repair as necessary.**

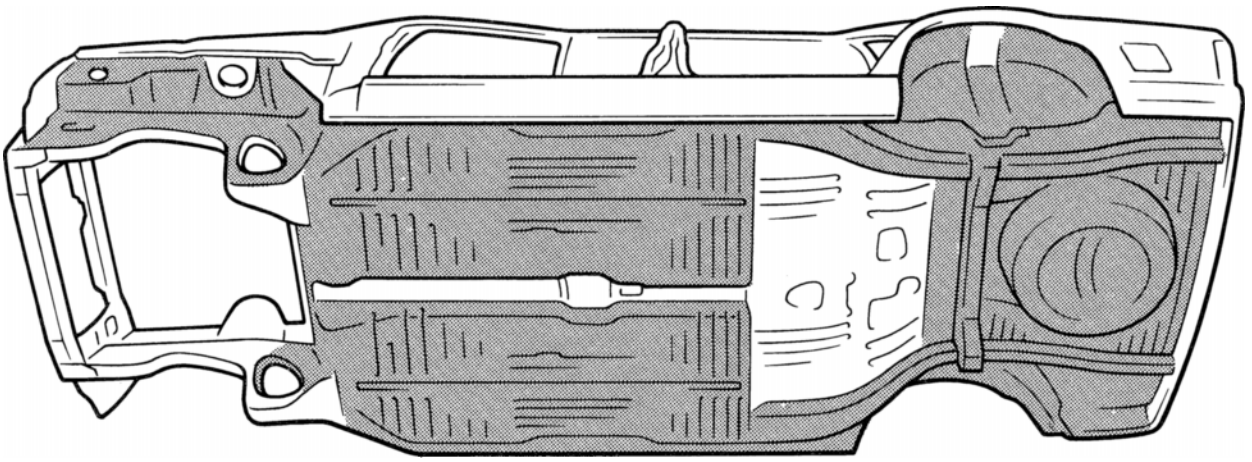

REFERENCE: Referring to the notes above, undercoating should be applied according to the specifications for your country.

BODY PANEL SEALING AREAS

NOTE:

1. **Prior to applying body sealer, clean the area with a rag soaked in grease, wax and silicone remover.**
2. **If weld-through primer was used, first wipe off any excess and coat with anti-corrosion primer before applying body sealer.**
3. **Wipe off any excess body sealer with a rag soaked in grease, wax and silicone remover.**
4. **If body sealer is damaged by peeling, cracks, etc., be sure to repair as necessary.**

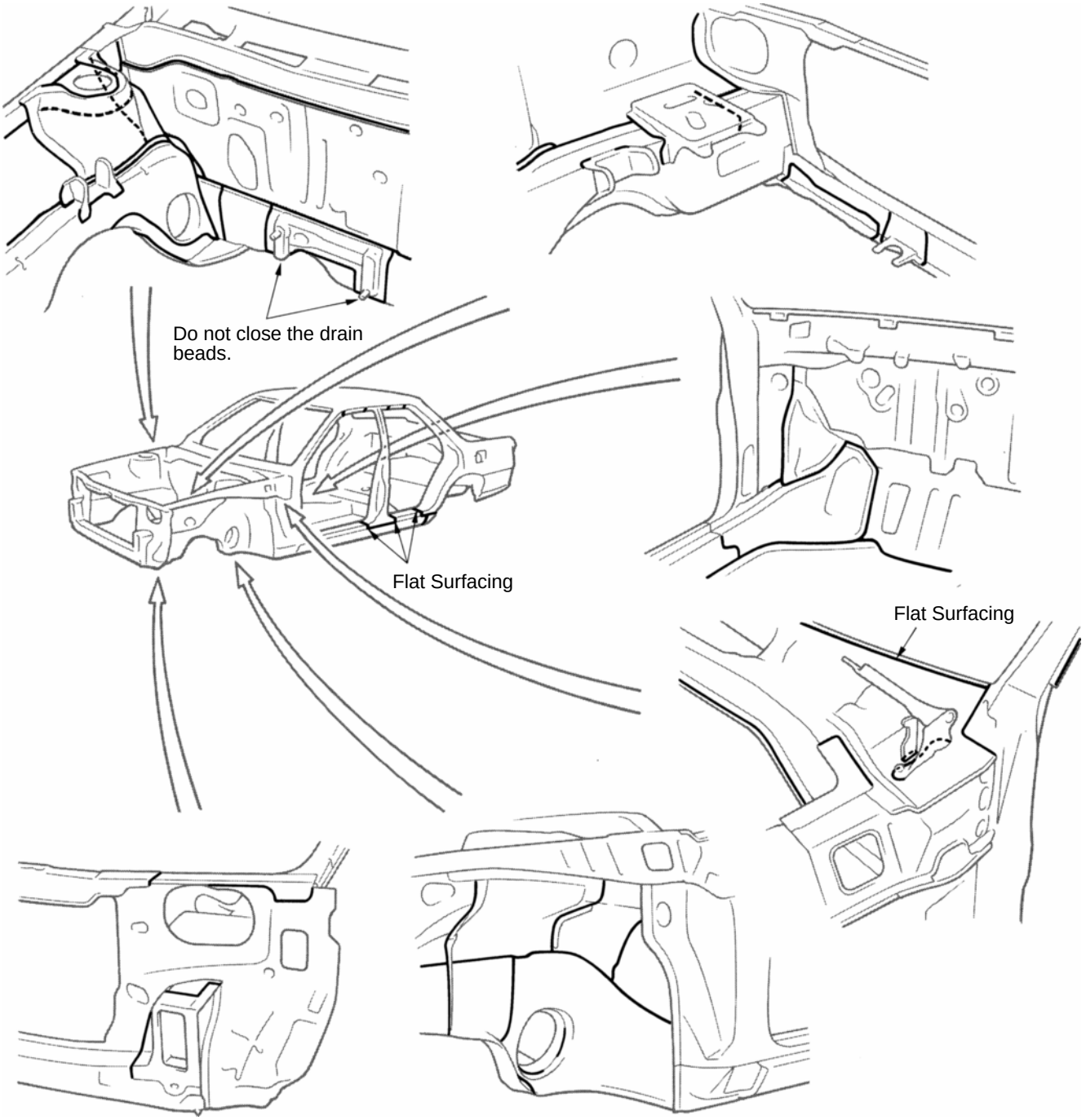

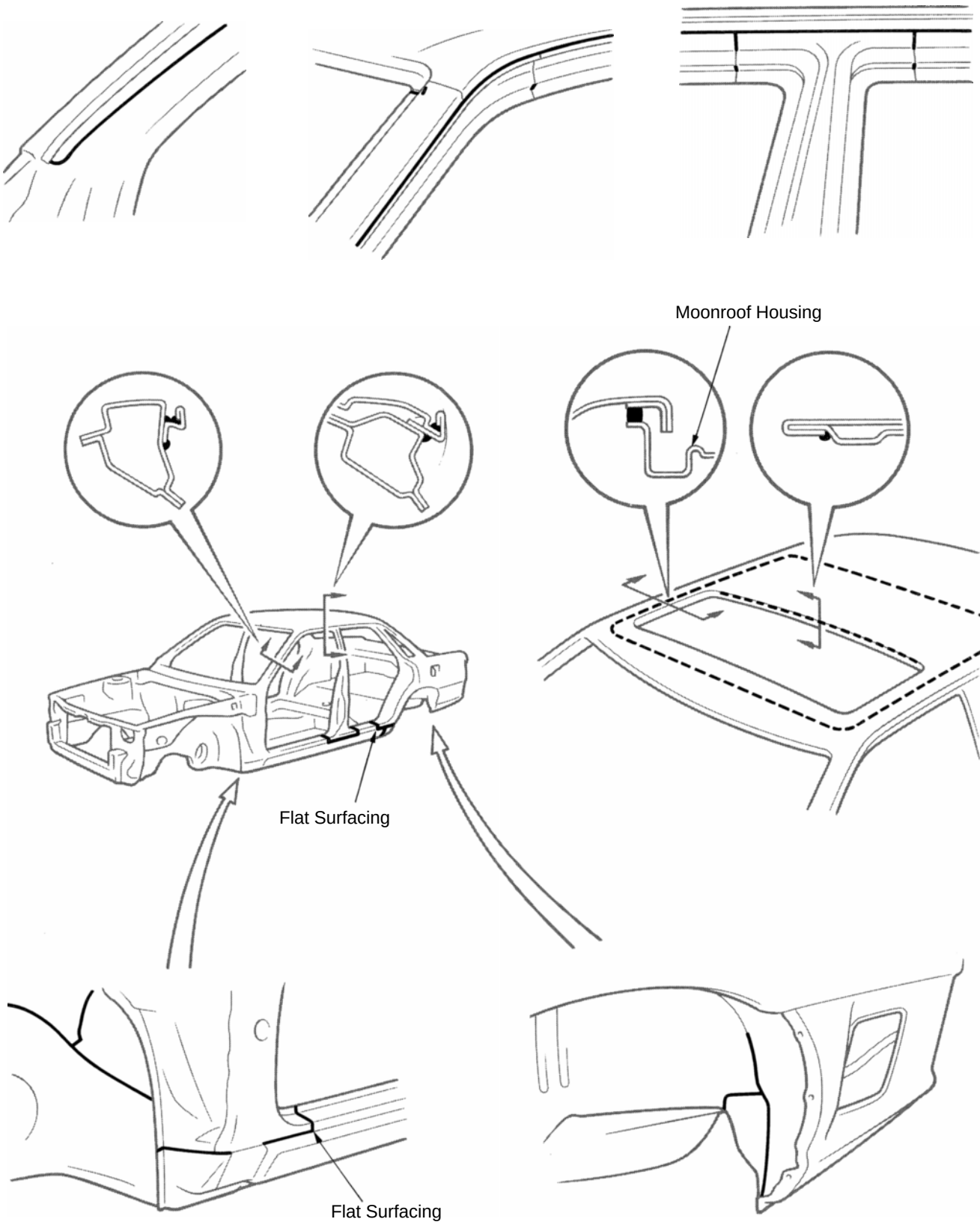
Moonroof Housing
Flat Surfacing
Flat Surfacing

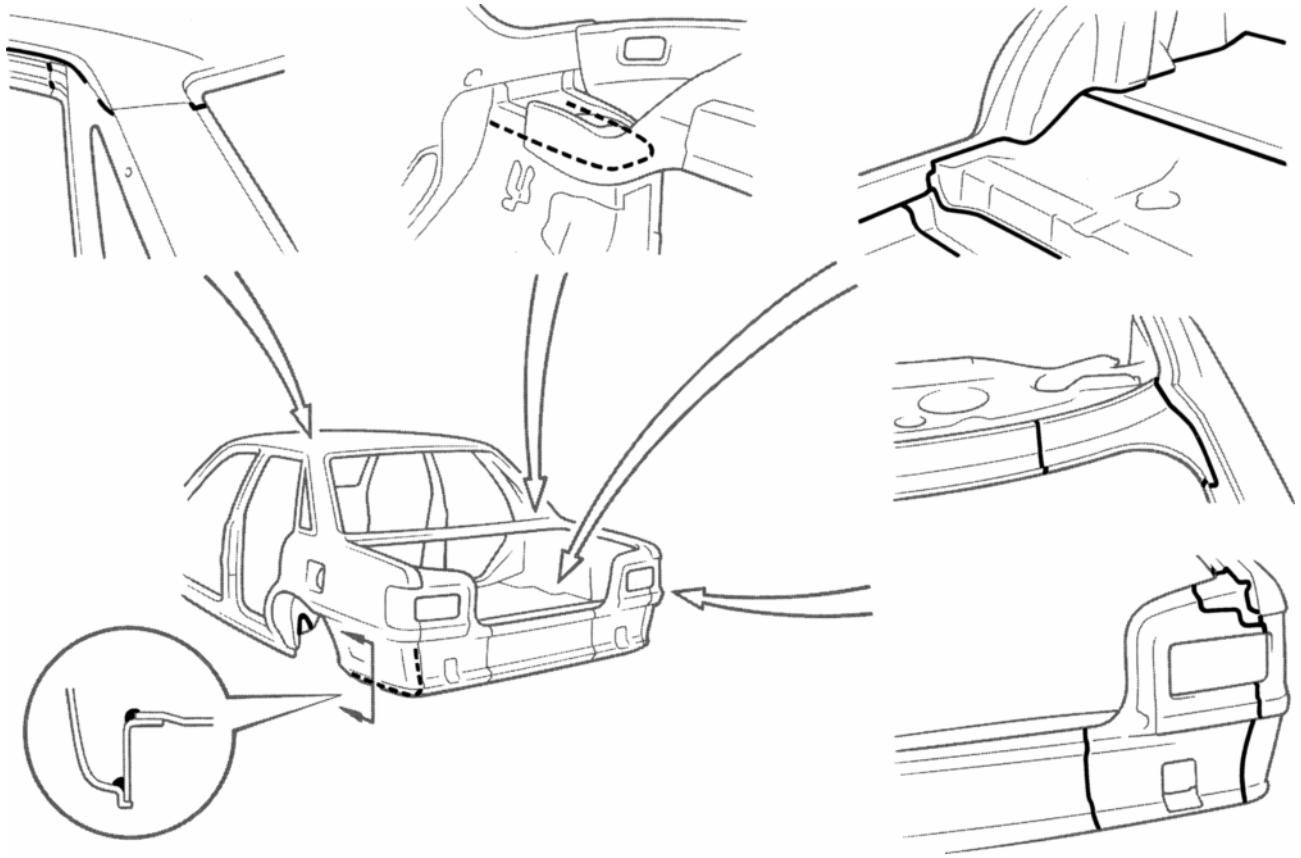

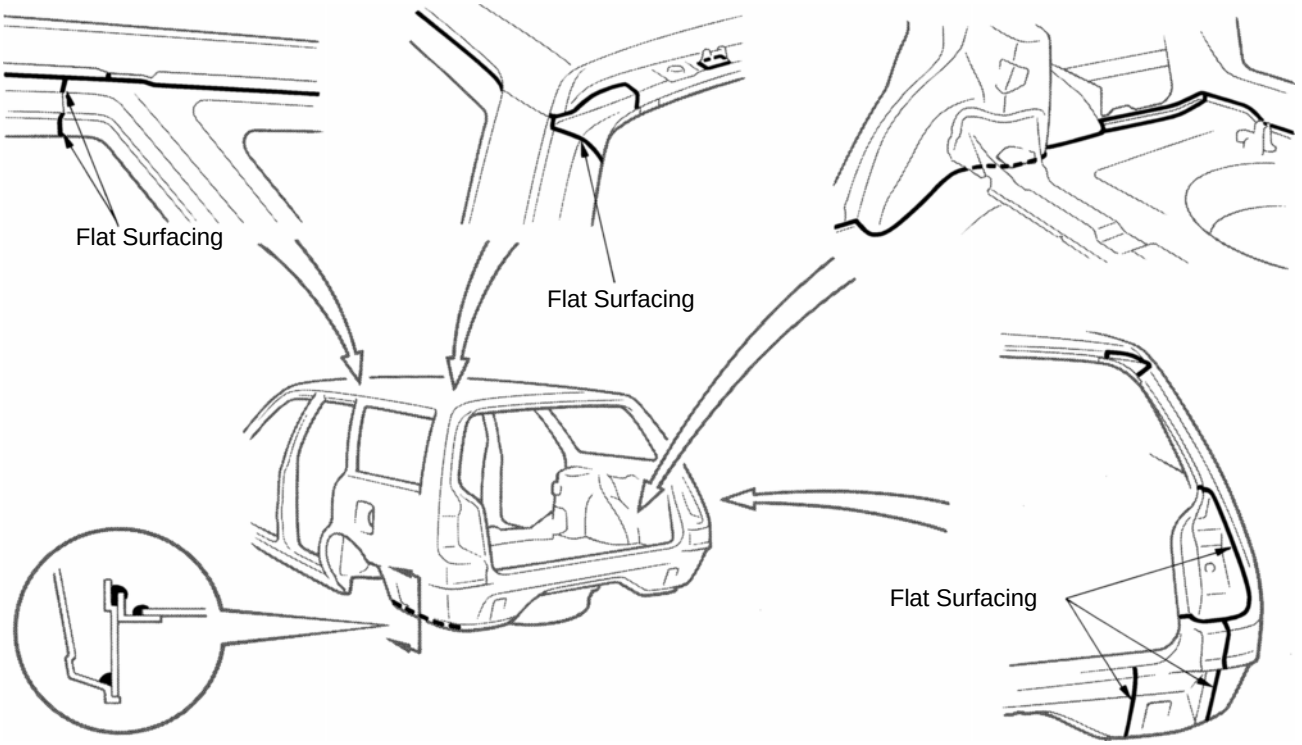
Flat Surfacing
Flat Surfacing
Flat Surfacing

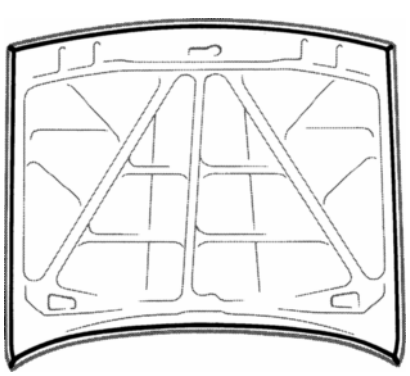

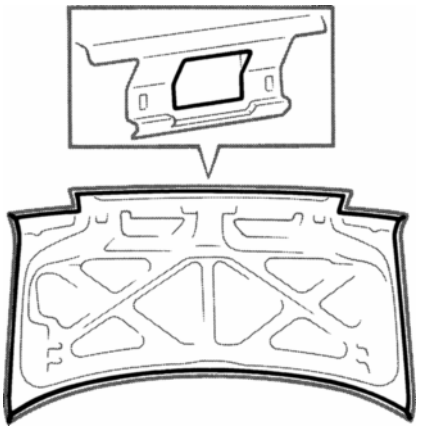

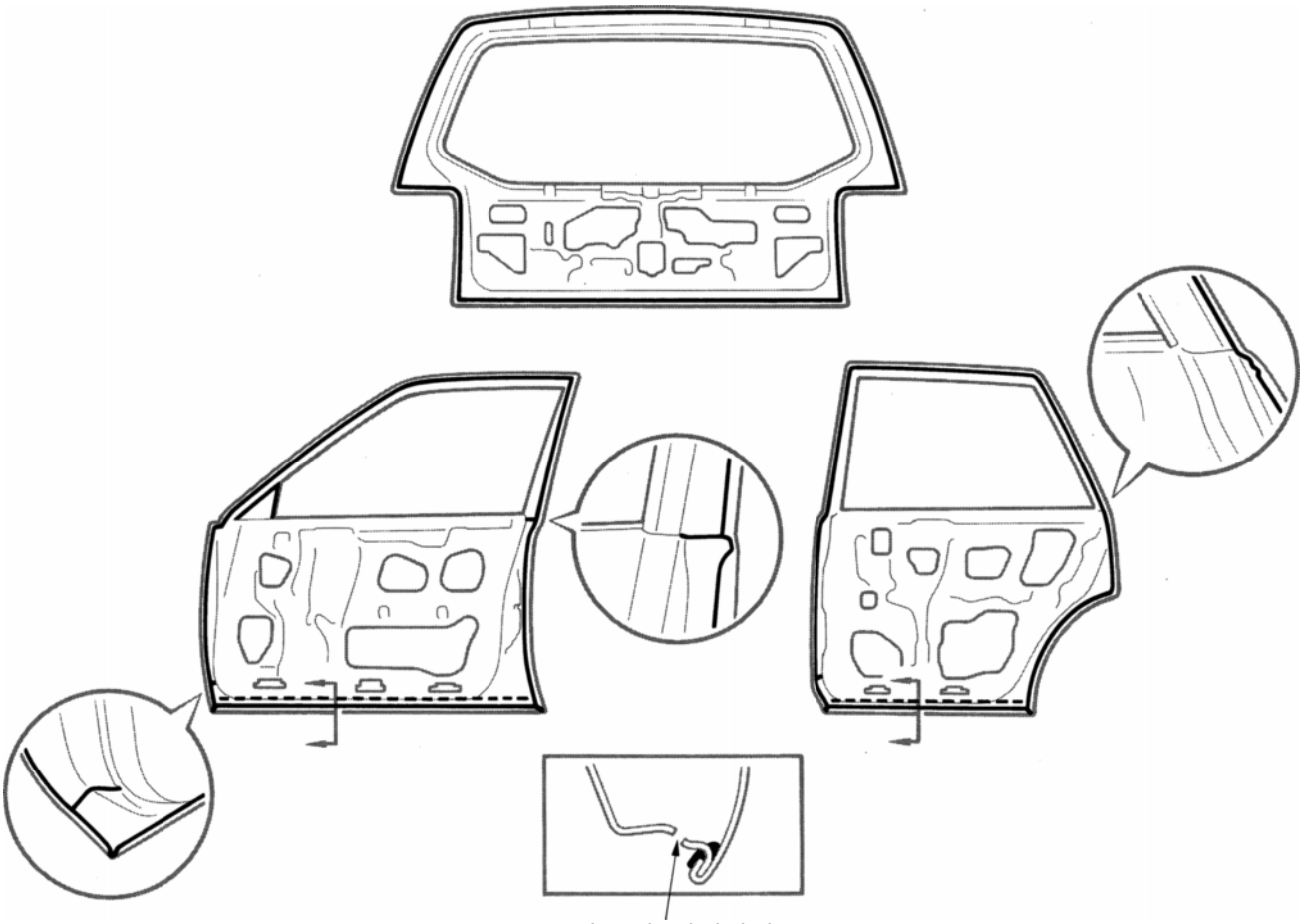

Do not close the drain hole.

Fuel Inlet Box

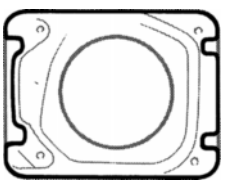

Fuel Inlet Box Cover

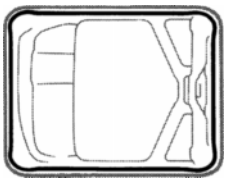

BODY PANEL ANTI-RUST AGENT (WAX) APPLICATION AREAS

NOTE:

1. **Whenever adjusting the doors and hoods, apply the anti-rust agent (wax) around the hinges.**
2. **Even if repairing a part partially, apply the anti-rust agent (wax) over entire application area of the part.**
3. **Wipe off the anti-rust agent immediately with a rag soaked in grease, wax, and silicone remover, if other areas are accidently applied.**

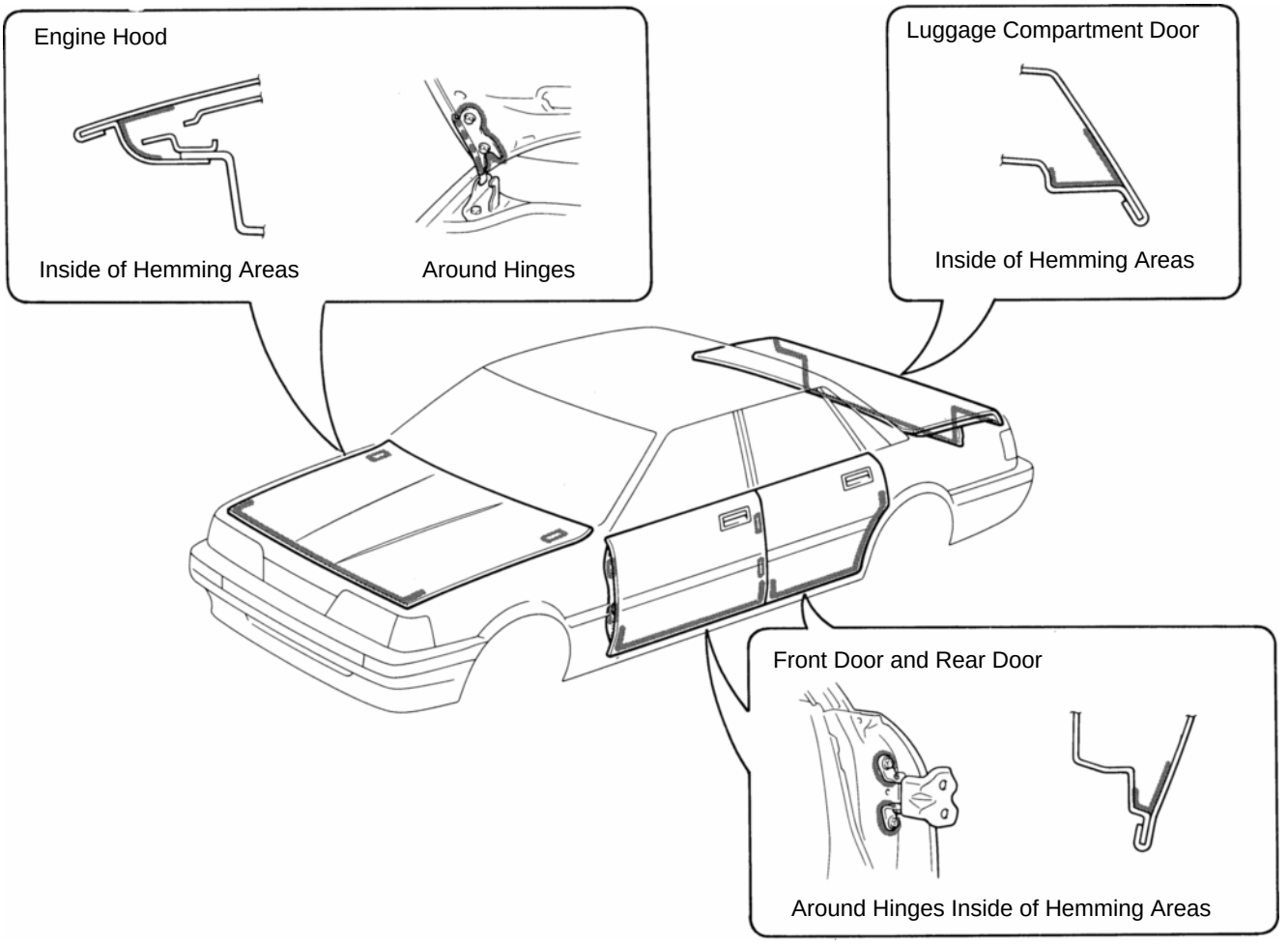

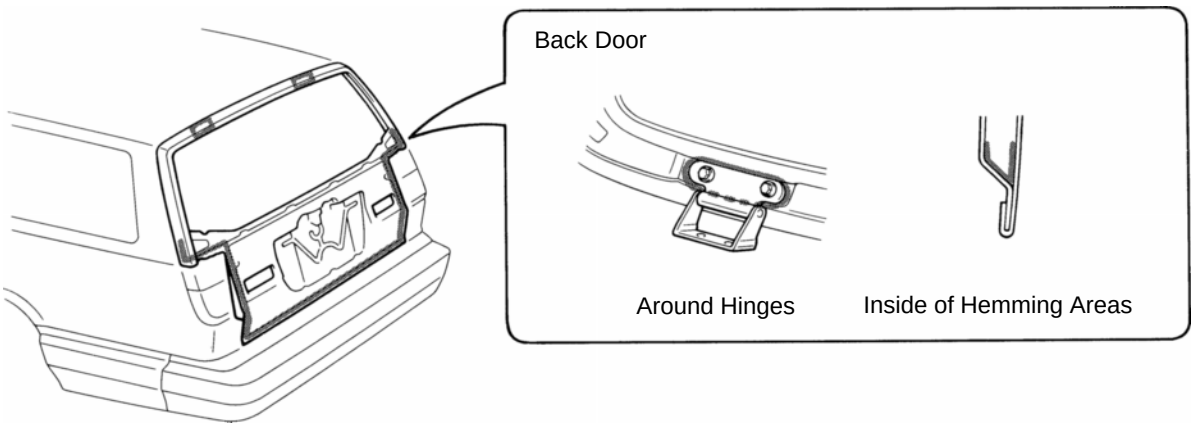

BODY PANEL ANTI-CHIPPING PAINT APPLICATION AREAS

NOTE:

1. **Some areas should be applied before a second coating and the other should be after a finishing coating.**
2. **Wipe off the coating immediately with a rag soaked in grease, wax, and silicone remover, if other areas are accidently coated.**

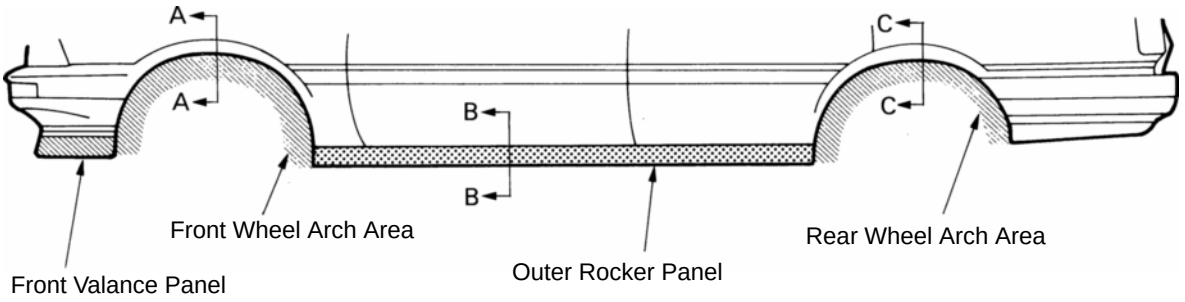

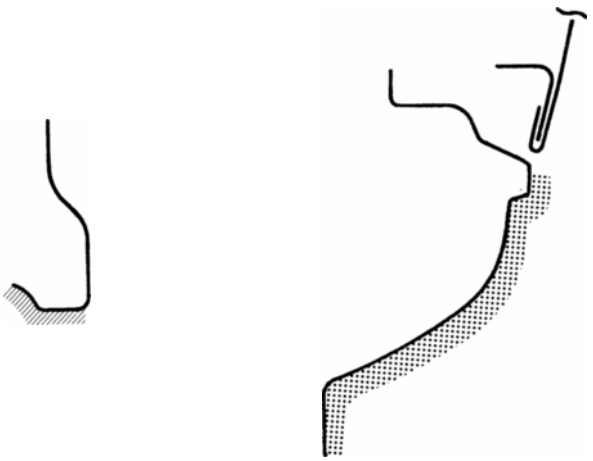

A-A Cross Section B-B Cross Section C-C Cross Section

Apply the anti-chipping paint before a second coating.

Apply the anti-chipping paint after a top coating.

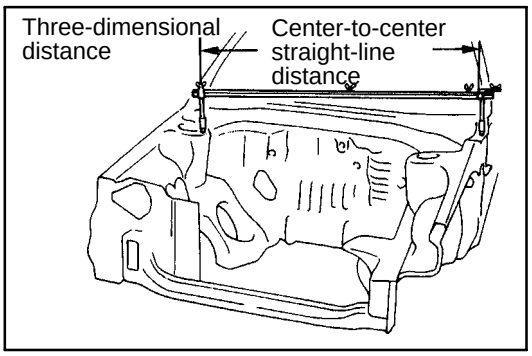

GENERAL INFORMATION

1. BASIC DIMENSIONS

(a) There are two types of dimensions in the diagram.
(Three-dimensional distance)

- Straight-line distance between the centers of two measuring points.

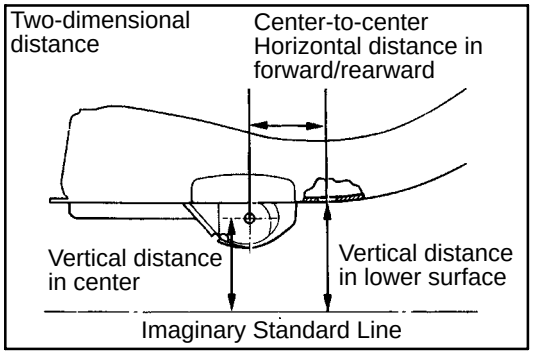

(Two-dimensional distance)

- Horizontal distance in forward/rearward between the centers of two measuring points.
- The height from an imaginary standard line.

(b) In cases in which only one dimension is given, left and right are symmetrical.

(c) The dimensions in the following drawing indicate actual distance. Therefore, please use the dimensions as a reference.

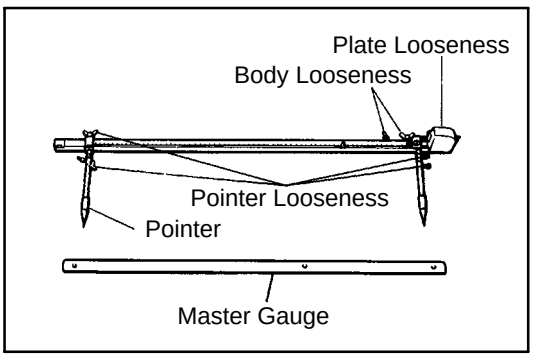

2. MEASURING

(a) Basically, all measurements are to be done with a tracking gauge. For portions where it is not possible to use a tracking gauge, a tape measure should be used.

(b) Use only a tracking gauge that has no looseness in the body, measuring plate, or pointers.

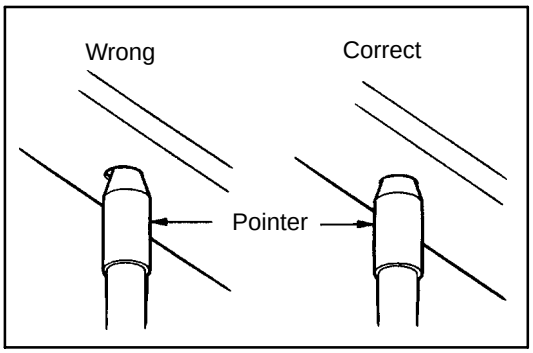

HINT:

1. *The height of the left and right pointers must be equal.*
2. *Always calibrate the tracking gauge before measuring or after adjusting the pointer height.*
3. *Take care not to drop the tracking gauge or otherwise shock it.*
4. *Confirm that the pointers are securely in the holes.*

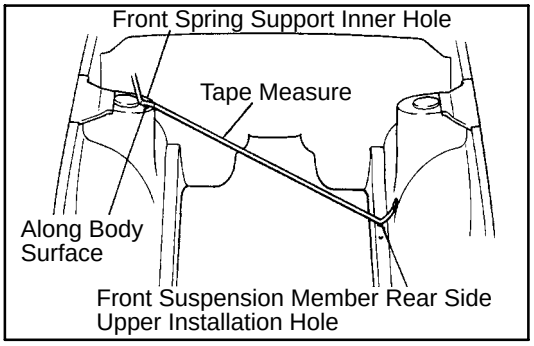

(c) When using a tape measure, avoid twists and bends in the tape.

(d) When tracking a diagonal measurement from the front spring support inner hole to the suspension member upper rear installation hole, measure along the front spring support panel surface.

BODY DIMENSION DRAWINGS

ENGINE COMPARTMENT

(Three-dimensional Distance)

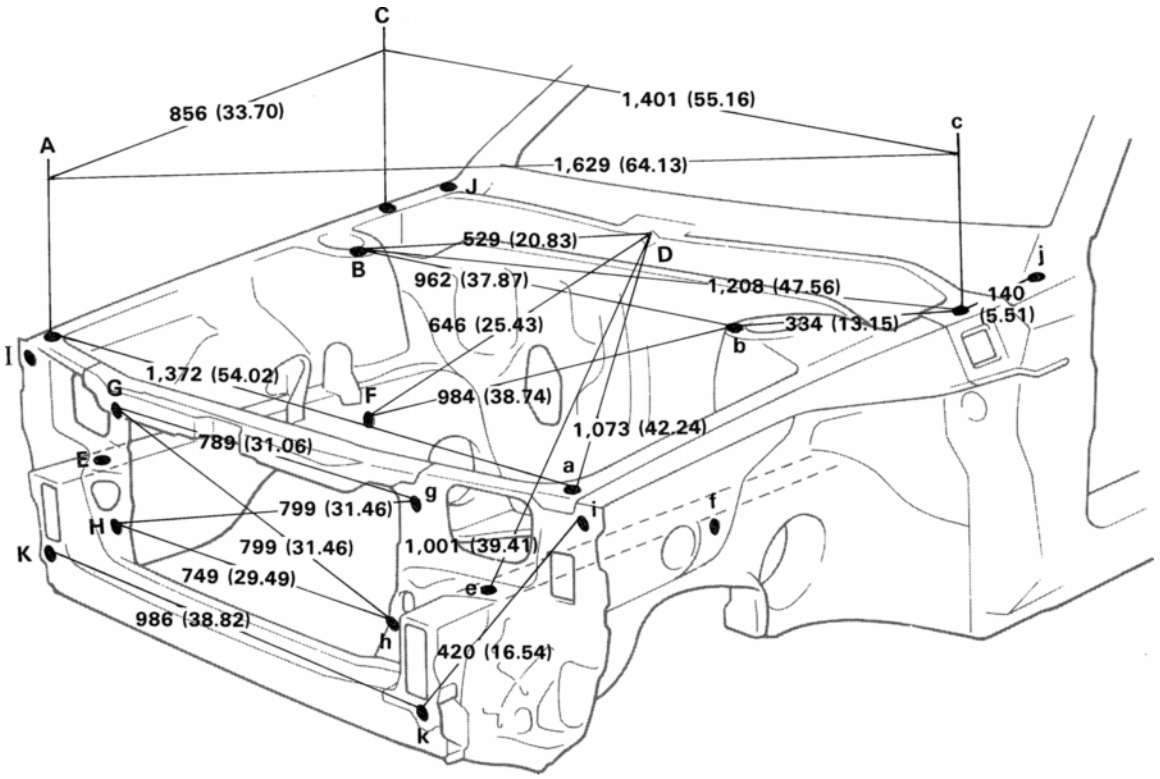

mm (in.)

Symbol	Nomenclature	Hole dia.
A, a	Front fender installation nut	6 (0.24)
B, b	Front spring support inner hole	11 (0.43)
C, c	Front fender installation nut	6 (0.24)
D	Cowl top panel center mark	—
E, e	Front side member bumper installation hole	15 (0.59)
F, f	Front side member standard hole	15 (0.59)
G, g	Headlight installation hole	20×6.5 (0.79×0.26)
H, h	Tube clamp installation nut	6 (0.24)
I, i	Front fender iinstallation nut	6 (0.24)
J, j	Cowl top panel standard hole	10 (0.39)
K, k	Front crossmember bumper installation nut	12 (0.47)

BO1973

UNDER BODY

(Three-dimensional Distance)

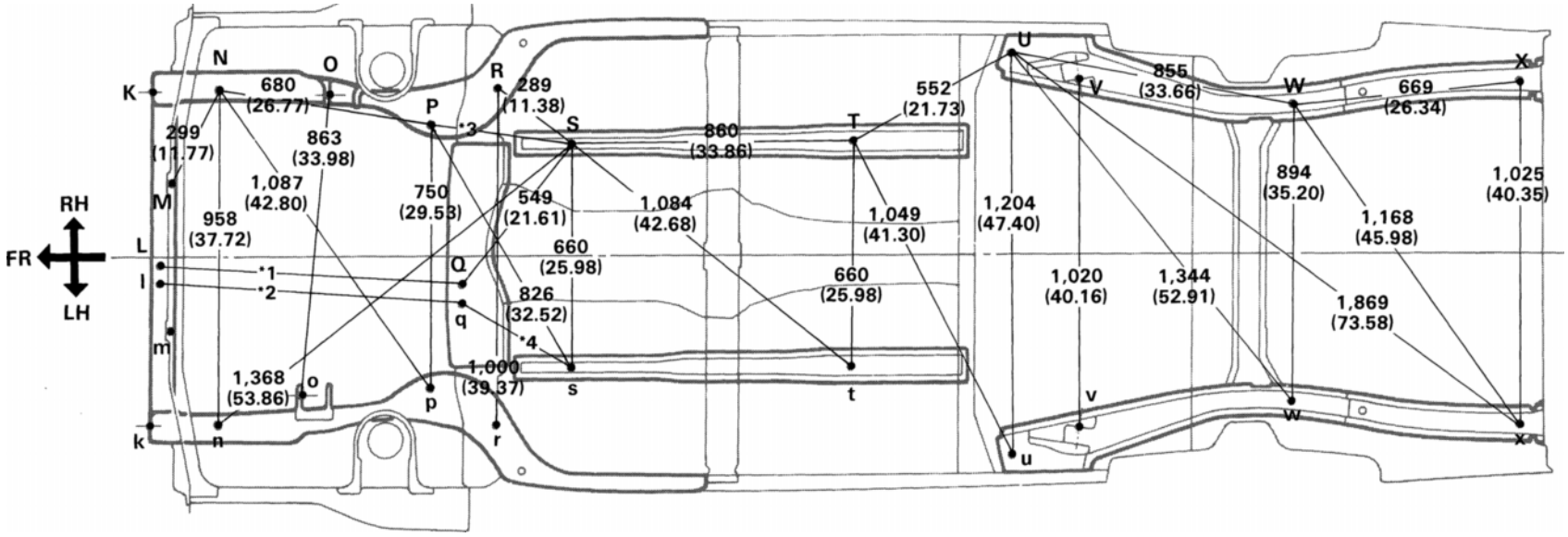

*1: L-Q 927 (36.50) *2: l-q 927 (35,50)
*3: P-S 433 (17.05) *4: q-s 404 (15.91)
p-s

Wheel Base	2,600 (102.36)

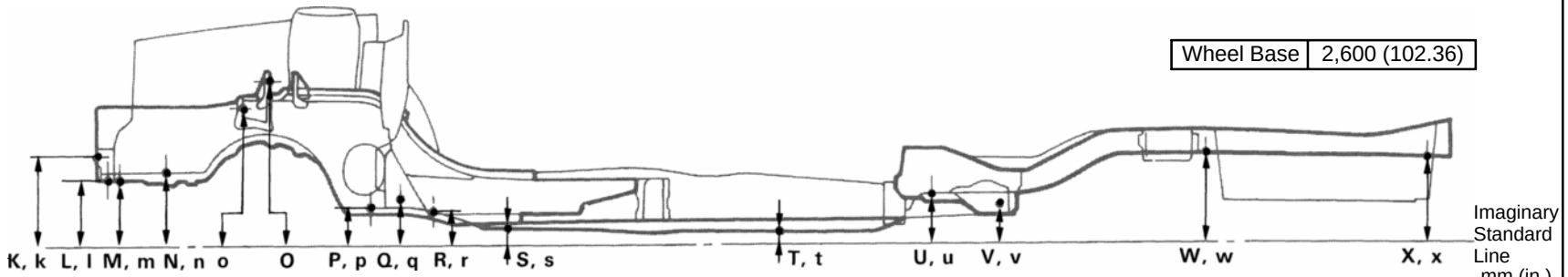

BO2224 BO2225

Symbol	Nomenclature	Note dia.	Symbol	Nomenclature	Hole dia.
L, l	Engine mounting member installation nut	10 (0.39)	S, s	Front floor under reinforcement working hole	10 (0.39)
M, m	Strut bar bracket front inner installation nut	10 (0.39)	T, t	Front floor under reinforcement working hole	18 (0.71)
N, n	Strut bar bracket rear front installation nut	10 (0.39)	U, u	Rear floor side member standard hole	15 (0.59)
O, o	Engine mounting bracket front hole	13 (0.51)	V, v	Strut bar inner installation hole	12 (0.47)
P, p	Lower arm installation nut	14 (0.55)	W, w	Rear floor side member standard hole	15 (0.59)
Q, q	Engine mounting member installation nut	10 (0.39)	X, x	Rear floor side member transport hook installation hole	15 (0.59)
R, r	Front side member standard hole	15 (0.59)			

UNDER BODY (Cont'd)

(Two-dimensional Distance)

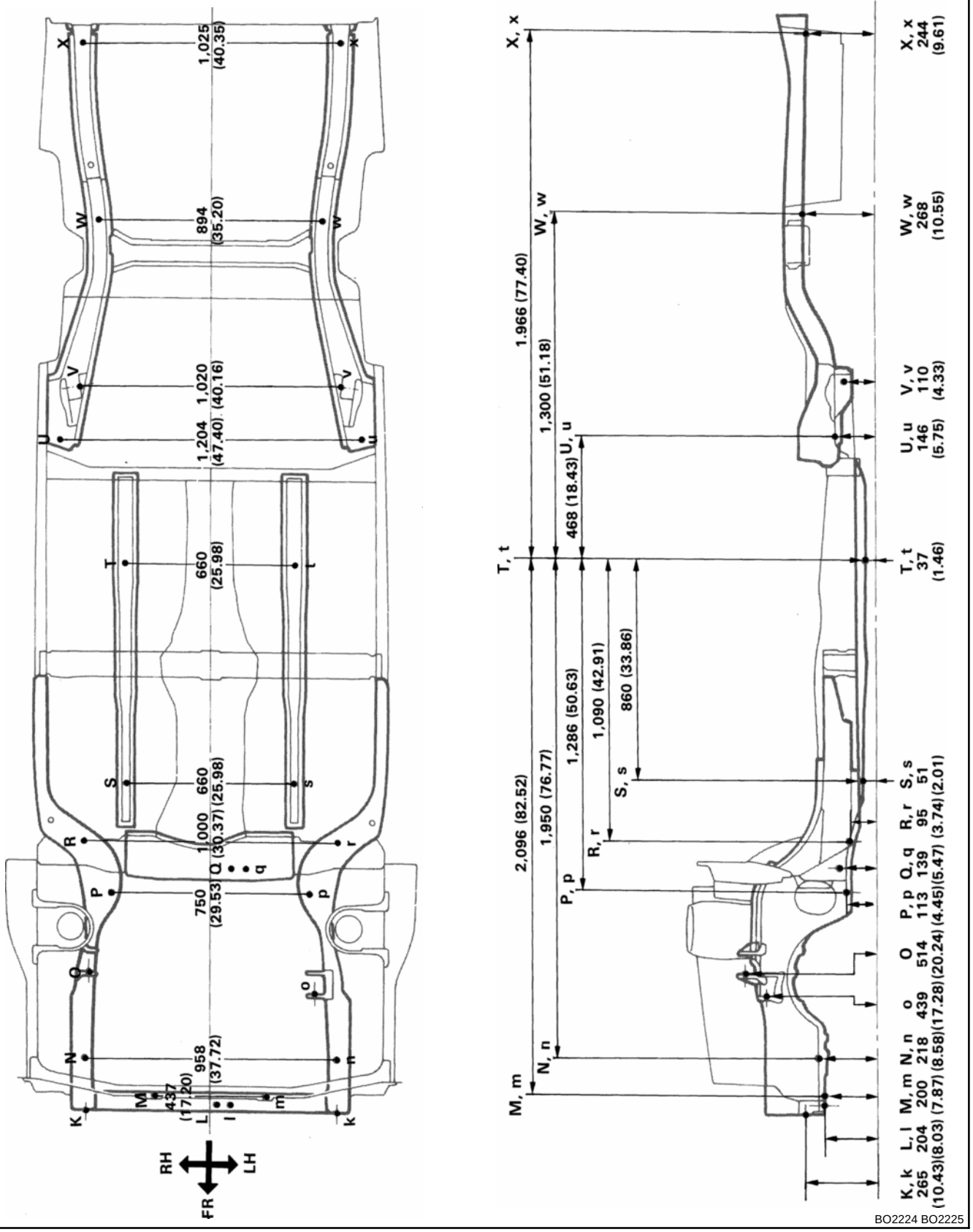

LUGGAGE COMPARTMENT (SEDAN)

(Three-dimensional Distance)

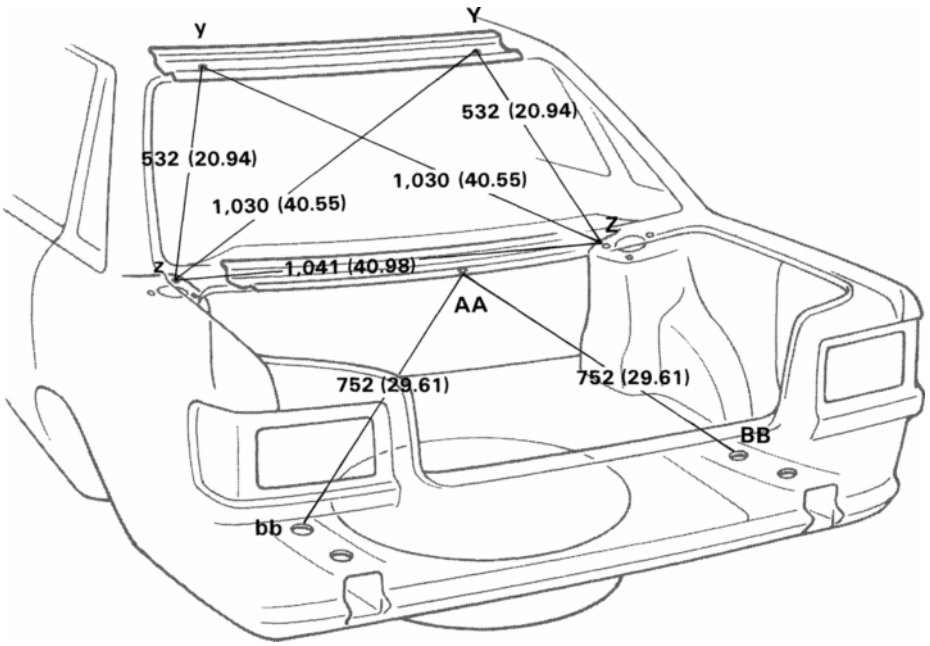

Y, y Points

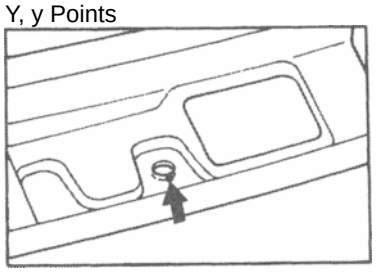

AA Point

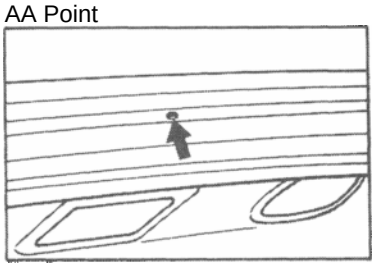

BB, bb Points

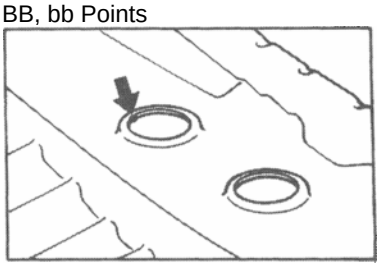

mm (in.)

Symbol	Nomenclature	Hole dia.
Y, y	Back window upper frame standard hole-rear	10 (0.39)
Z, z	Rear spring support front hole	9.5 (0.37)
AA	Upper back reinforcement center mark	3 (0.12)
BB, bb	Rear floor pan bumper front installation hole-front	45 (1.77)

BO1975

LUGGAGE COMPARTMENT (WAGON)

(Three-dimensional Distance)

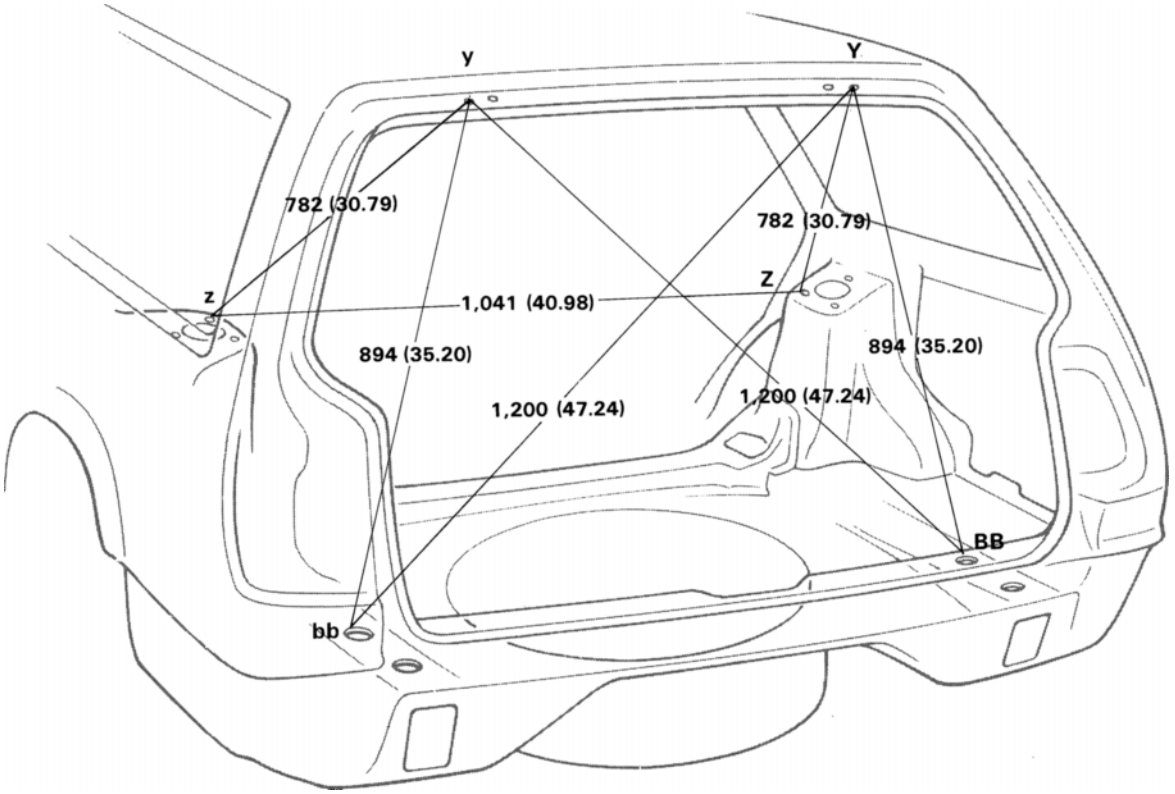

Y, y Points

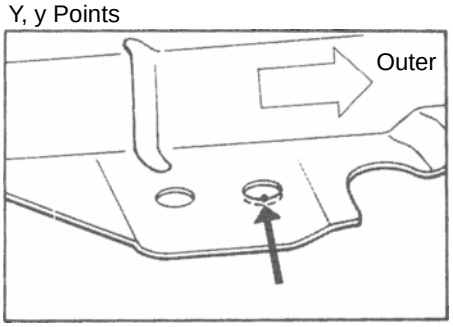

BB, bb Points

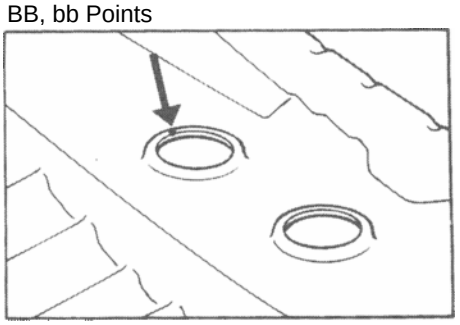

mm (in.)

Symbol	Nomenclature	Hole dia.
Y, y	Back door installation outer hole-rear	13 (0.51)
Z, z	Rear spring support front hole	9.5 (0.37)
BB, bb	Rear floor bumper installation front hole-front	45 (1.77)

BO1976